DEPARTMENT OF NATURAL RESOURCES

LAW ENFORCEMENT DIVISION

WHOLESALE FISH DEALERS REPORT FORMS #9165

R 308.1
Source: 1987 AACS.

LOCAL HUNTING AND FIREARMS CONTROLS

R 317.101.1
Source: 1981 AACS.

R 317.108.2
Source: 1980 AACS.

R 317.111.2
Source: 1983 AACS.

R 317.123.1
Source: 1982 AACS.

R 317.123.3
Source: 1982 AACS.

R 317.123.4
Source: 1982 AACS.

R 317.125.8
Source: 1984 AACS.

R 317.135.2
Source: 1980 AACS.

R 317.135.3
Source: 1984 AACS.

R 317.138.2
Source: 1980 AACS.

R 317.138.3
Source: 1980 AACS.

R 317.147.8
Source: 1981 AACS.

R 317.150.1
Source: 1982 AACS.

R 317.150.5
Source: 1997 AACS.

R 317.150.9
Source: 1985 AACS.

R 317.150.10

Source: 1997 AACS.

R 317.150.12
Source: 1983 AACS.

R 317.151.1
Source: 1985 AACS.

R 317.163.6
Source: 1984 AACS.

R 317.163.7
Source: 1984 AACS.

R 317.163.8
Source: 1997 AACS.

R 317.163.10
Source: 1997 AACS.

R 317.163.11
Source: 1997 AACS.

R 317.163.12
Source: 1997 AACS.

R 317.163.20
Source: 1997 AACS.

R 317.163.25
Source: 1997 AACS.

R 317.163.36
Source: 1997 AACS.

R 317.163.38
Source: 1997 AACS.

R 317.163.41
Source: 1997 AACS.

R 317.163.42
Source: 1985 AACS.

R 317.163.43
Source: 1980 AACS.

R 317.163.44
Source: 1984 AACS.

R 317.163.45
Source: 1981 AACS.

R 317.163.46
Source: 1981 AACS.

R 317.169.2
Source: 1980 AACS.

R 317.171.3
Source: 1985 AACS.

R 317.173.1
Source: 1985 AACS.

R 317.173.3
Source: 1982 AACS.

R 317.181.5
Source: 1982 AACS.

R 317.182.1
Source: 1983 AACS.

R 317.182.8
Source: 1980 AACS.

R 317.182.9
Source: 1983 AACS.

R 317.182.10
Source: 1983 AACS.

R 317.182.11
Source: 1982 AACS.

R 317.182.12
Source: 1982 AACS.

MACKINAC ISLAND STATE PARK COMMISSION

GENERAL RULES

PART 1. DEFINITIONS

R 318.111
Source: 2002 AACS.

R 318.112
Source: 2002 AACS.

R 318.113
Source: 2002 AACS.

R 318.114
Source: 2002 AACS.

R 318.115
Source: 2002 AACS.

R 318.116
Source: 2002 AACS.

R 318.117
Source: 2002 AACS.

R 318.118

Source: 2002 AACS.

R 318.119
Source: 2002 AACS.

R 318.119a
Source: 2002 AACS.

R 318.119b
Source: 1997 AACS.

R 318.119c
Source: 2002 AACS.

R 318.119d
Source: 2002 AACS.

R 318.120
Source: 2002 AACS.

PART 2. REGULATIONS

R 318.121
Source: 2002 AACS.

R 318.122
Source: 2002 AACS.

R 318.122a
Source: 2002 AACS.

R 318.122b
Source: 2002 AACS.

R 318.123
Source: 2002 AACS.

R 318.124
Source: 2002 AACS.

R 318.126
Source: 2002 AACS.

R 318.127
Source: 2002 AACS.

R 318.129
Source: 2002 AACS.

R 318.133
Source: 2002 AACS.

R 318.134
Source: 2002 AACS.

R 318.135
Source: 2002 AACS.

R 318.136

Source: 2002 AACS.

R 318.141
Source: 2002 AACS.

R 318.142
Source: 2002 AACS.

R 318.143
Source: 2002 AACS.

R 318.144
Source: 2002 AACS.

R 318.145
Source: 2002 AACS.

R 318.145a
Source: 1997 AACS.

R 318.145b
Source: 2002 AACS.

R 318.146
Source: 2002 AACS.

R 318.147
Source: 2002 AACS.

NATURAL RESOURCES COMMISSION

RECREATION BOND PROGRAM

R 318.201
Source: 1989 AACS.

R 318.202
Source: 1989 AACS.

R 318.203
Source: 1989 AACS.

R 318.204
Source: 1989 AACS.

R 318.205
Source: 1989 AACS.

R 318.206
Source: 1989 AACS.

R 318.207
Source: 1989 AACS.

R 318.208
Source: 1989 AACS.

R 318.209
Source: 1989 AACS.

R 318.210
Source: 1989 AACS.

R 318.211
Source: 1989 AACS.

WILDERNESS AND NATURAL AREAS

R 322.3.1
Source: 1988 AACS.

DEPARTMENT OF ENVIRONMENTAL QUALITY

LAND AND WATER MANAGEMENT

GREAT LAKES SUBMERGED LANDS

R 322.1001
Source: 1986 AACS.

R 322.1002
Source: 1982 AACS.

R 322.1003
Source: 1986 AACS.

R 322.1004
Source: 1982 AACS.

R 322.1005
Source: 1982 AACS.

R 322.1006
Source: 1982 AACS.

R 322.1007
Source: 1982 AACS.

R 322.1008
Source: 1982 AACS.

R 322.1009
Source: 1982 AACS.

R 322.1010
Source: 1982 AACS.

R 322.1011
Source: 1986 AACS.

R 322.1012
Source: 1982 AACS.

R 322.1013
Source: 1986 AACS.

R 322.1014
Source: 1982 AACS.

R 322.1015
Source: 1982 AACS.

R 322.1016
Source: 1982 AACS.

R 322.1017
Source: 1982 AACS.

R 322.1018
Source: 1982 AACS.

DEPARTMENT OF ENVIRONMENTAL QUALITY

SURFACE WATER QUALITY DIVISION

GENERAL RULES

R 323.2
Source: 2001 AACS.

R 323.4
Source: 2001 AACS.

R 323.5
Source: 2001 AACS.

R 323.8
Source: 2001 AACS.

R 323.9
Source: 2001 AACS.

DEPARTMENT OF NAUTURAL RESOURCES

NATURAL RESOURCES COMMISSION

STATE REVOLVING LOAN FUND

R 323.951
Source: 1989 AACS.

R 323.952
Source: 1989 AACS.

R 323.953
Source: 1989 AACS.

R 323.954
Source: 1989 AACS.

R 323.955
Source: 1989 AACS.

R 323.956

Source: 1989 AACS.

R 323.957
Source: 1989 AACS.

R 323.958
Source: 1989 AACS.

R 323.959
Source: 1989 AACS.

R 323.960
Source: 1989 AACS.

R 323.961
Source: 1989 AACS.

R 323.962
Source: 1989 AACS.

R 323.963
Source: 1989 AACS.

R 323.964
Source: 1989 AACS.

R 323.965
Source: 1989 AACS.

DEPARTMENT OF ENVIRONMENTAL QUALITY

WATER RESOURCES PROTECTION

PART 1. GENERAL PROVISIONS

R 323.1001
Source: 2001 AACS.

R 323.1003
Source: 2001 AACS.

R 323.1009
Source: 2001 AACS.

PART 2. ORGANIZATION, OPERATIONS, PROCEDURES, AND HEARINGS

R 323.1011
Source: 2001 AACS.

R 323.1012
Source: 2001 AACS.

R 323.1014
Source: 2001 AACS.

R 323.1015
Source: 2001 AACS.

R 323.1017
Source: 1997 AACS.

R 323.1018
Source: 2001 AACS.

R 323.1021
Source: 2001 AACS.

R 323.1023
Source: 2001 AACS.

R 323.1025
Source: 2001 AACS.

R 323.1027
Source: 1997 AACS.

R 323.1031
Source: 1997 AACS.

R 323.1032
Source: 1997 AACS.

R 323.1033
Source: 1997 AACS.

R 323.1034
Source: 1997 AACS.

R 323.1035
Source: 1997 AACS.

R 323.1036
Source: 1997 AACS.

R 323.1038
Source: 1997 AACS.

PART 4. WATER QUALITY STANDARDS

R 323.1041
Source: 1994 AACS.

R 323.1043
Source: 1998-2000 AACS.

R 323.1044
Source: 1997 AACS.

R 323.1050
Source: 1986 AACS.

R 323.1051
Source: 1984 AACS.

R 323.1053
Source: 1986 AACS.

R 323.1055
Source: 1986 AACS.

R 323.1057

Source: 1997 AACS.

R 323.1058
Source: 1986 AACS.

R 323.1060
Source: 1986 AACS.

R 323.1062
Source: 1994 AACS.

R 323.1064
Source: 1986 AACS.

R 323.1065
Source: 1986 AACS.

R 323.1070
Source: 1986 AACS.

R 323.1074
Source: 1997 AACS.

R 323.1075
Source: 1986 AACS.

R 323.1080
Source: 1997 AACS.

R 323.1082
Source: 1997 AACS.

R 323.1090
Source: 1997 AACS.

R 323.1091
Source: 1997 AACS.

R 323.1092
Source: 1986 AACS.

R 323.1096
Source: 1986 AACS.

R 323.1097
Source: 1986 AACS.

R 323.1098
Source: 1998-2000 AACS.

R 323.1099
Source: 1997 AACS.

R 323.1100
Source: 1998-2000 AACS.

R 323.1103
Source: 1997 AACS.

R 323.1110

Source: 1997 AACS.

R 323.1115
Source: 1997 AACS.

R 323.1116
Source: 1998-2000 AACS.

R 323.1117
Source: 1997 AACS.

PART 5. SPILLAGE OF OIL AND POLLUTING MATERIALS

R 323.1151
Source: 2001 AACS.

R 323.1152
Source: 2001 AACS.

R 323.1153
Source: 2001 AACS.

R 323.1154
Source: 2001 AACS.

R 323.1155
Source: 2001 AACS.

R 323.1156
Source: 2001 AACS.

R 323.1157
Source: 2001 AACS.

R 323.1158
Source: 2001 AACS.

R 323.1159
Source: 2001 AACS.

R 323.1161
Source: 2001 AACS.

R 323.1163
Source: 2001 AACS.

R 323.1164
Source: 2001 AACS.

R 323.1169
Source: 2001 AACS.

PART 6. CLEANING AGENTS AND WATER CONDITIONERS

R 323.1171 Definitions.
Rule 171. As used in this part:
(a) "Constituent" means a compound or ingredient contained in the formula of a cleaning agent or water conditioner, other than phosphorus, identified by its common chemical name.
(b) "Department" means the director of the department of environmental quality or his or her designee to whom the director delegates a power or duty by written instrument.

(c) "Person" means a manufacturer, processor, formulator, or packager who sells or distributes any cleaning agent or water conditioner for use in this state.
History: 1954 ACS 73, Eff. Oct. 20, 1972; 1979 AC; 2002 MR 24, Eff Jan. 7, 2003.

R 323.1172 Applicability of rules; exceptions.
Rule 172. The rules in this part apply to all cleaning agents and water conditioners as defined by section 3901 of 1994 PA 451, MCL 324.3901, except for any of the following:
(a) A cleanser, rinsing aid, or sanitizing agent intended primarily for use in an automatic or machine dishwasher.
(b) An industrial and commercial conversion coating agent, corrosion remover, paint remover, rust inhibitor, metal brightener, etchant, or other surface conditioner.
(c) A solvent cleaner or other similar product not normally used with water.
(d) A disinfectant or sanitizer used in institutions, hospitals, and health care facilities.
(e) A compound or product used in the manufacture or processing of foods and food products, including those used in dairy, beverage, egg, fish, poultry, meat, fruit, and vegetable processing facilities.
(f) A product intended primarily for personal use, including, but not limited to, bathing soaps, dentifrices, shampoos, cleansing creams, toothpastes, and other products for the care of the human body.
(g) A product subject to registration or control under federal or state law governing foods, drugs, cosmetics, insecticides, fungicides, and rodenticides.
(h) A product normally not used with water, such as a cleanser for windows, ovens, or other hard surfaces.
(i) A water softening chemical, anti-scale chemical, or corrosion inhibitor intended for use in circulatory systems, such as boilers, air conditioners, cooling towers, and hot water heating systems.
History: 1954 ACS 73, Eff. Oct. 20, 1972; 1979 AC; 2002 MR 24, Eff. Jan. 7, 2003.

R 323.1173 Statements of product constituents and restrictions.
(1) A person shall not sell or distribute a new, reformulated, or altered cleaning agent or water conditioner unless the person first has filed both of the following with the department:
(a) A written statement setting forth the percentage of phosphorus by weight, expressed as elemental phosphorus, and the chemical names of all constituents in such product not previously filed with the department.
(b) A written statement that a cleaning agent or water conditioner is not likely to cause unlawful pollution or other conditions or injuries as described in sections 3 and 4 of 1994 PA 451, MCL 324.3903 and 324.3904.
(2) A person shall furnish additional information about any constituent contained in a cleaning agent or water conditioner, upon request by the department, if the department determines that the information is necessary to protect the waters of the state from unlawful pollution or other injuries as described in sections 3 and 4 of 1994 PA 451, MCL 324.3903 and 324.3904.
(3) A person shall not sell or distribute for use in this state a household laundry detergent which contains phosphorus in any form in excess of 0.5% by weight, expressed as elemental phosphorus.
(4) Information filed with the department pursuant to this rule shall be used by the department only as the information is necessary to implement the department's function and duty as prescribed by section 3901 et seq. of 1994 PA 451, MCL 324.3901 et seq.
History: 1954 ACS 73, Eff. Oct. 20, 1972; 1954 ACS 93, Eff. Sept. 24, 1977; 1979 AC; 2002 MR 24, Eff. Jan. 7, 2003.

R 323.1174 Rescinded.
History: 1954 ACS 73, Eff. Oct. 20, 1972; 1979 AC; rescinded 2002 MR 24, Eff. Jan. 7, 2003.

R 323.1175 Statements and determinations; proofs and consultations.
Rule 175. (1) A statement filed with the department pursuant to R 323.1173 may be contested by the department if it determines that a cleaning agent or water conditioner is causing or is likely to cause unlawful pollution or other injuries as defined in sections 3 and 4 of 1994 PA 451, MCL 324.3903 and 324.3904.
(2) In determining whether a cleaning agent or water conditioner is causing or is likely to cause unlawful pollution or other injuries as defined in sections 3 and 4 of 1994 PA 451, MCL 324.3903 and 324.3904, the department may seek the counsel and advice of the director of the department of community health on the health or safety of any users of the cleaning agent or water conditioner and of any state or federal agency or educational institution as to any harmful effect upon animals, aquatic life, or beneficial water uses.
(3) A contest asserted by the department shall be noticed, heard, and determined in accordance with 1969 PA 306, MCL 24.201 et seq.
History: 1954 ACS 73, Eff. Oct. 20, 1972; 1979 AC; 2002 MR 24, Eff. Jan. 7, 2003.

R 323.1180 Department requests; hearings; determinations.
Rule 180. The department may request the reduction or removal of a constituent or chemical by a person if the department believes that the use of the constituent or chemical in a cleaning agent or water conditioner, under conditions of intended or probable use, is likely to cause a water pollution or public health problem. The department may issue an order of determination regulating or banning the product or constituent after hearing held in accordance with 1969 PA 306, MCL 24.201 et seq., unless procedure is otherwise prescribed in this part, if voluntary reduction or removal is not accomplished as requested.
History: 1954 ACS 73, Eff. Oct. 20, 1972; 1979 AC; 2002 MR 24, Eff. Jan. 7, 2003.

R 323.1181 Hearings, notices and appearances.
Rule 181. (1) When the department determines that a restriction on the nutrient content or other constituent of a cleaning agent or water conditioner is necessary to abate or prevent injury defined in sections 3 and 4 of 1994 PA 451, MCL 324.3903 and 324.3904, the department shall notify the person affected by certified mail and set a date for a hearing on the facts and proposed action. The hearing shall be held in accordance with 1969 PA 306, MCL 24.201 et seq.
(2) An appearance at a hearing shall be made in person by a duly authorized agent or by counsel.
History: 1954 ACS 73, Eff. Oct. 20, 1972; 1979 AC; 2002 MR 24, Eff. Jan. 7, 2003.

PART 8. WATER QUALITY-BASED EFFLUENT LIMIT DEVELOPMENT FOR TOXIC SUBSTANCES

R 323.1201
Source: 1997 AACS.

R 323.1203
Source: 1997 AACS.

R 323.1205
Source: 1997 AACS.

R 323.1207
Source: 1997 AACS.

R 323.1209
Source: 1997 AACS.

R 323.1211
Source: 1997 AACS.

R 323.1213
Source: 1997 AACS.

R 323.1217
Source: 1997 AACS.

R 323.1219
Source: 1997 AACS.

R 323.1221
Source: 1997 AACS.

PART 9. WASTEWATER REPORTING

R 323.1231
Source: 1997 AACS.

R 323.1232

Source: 1997 AACS.

R 323.1233
Source: 1997 AACS.

R 323.1234
Source: 1997 AACS.

R 323.1235
Source: 1997 AACS.

R 323.1236
Source: 1997 AACS.

R 323.1237
Source: 1997 AACS.

R 323.1238
Source: 1997 AACS.

R 323.1239
Source: 1997 AACS.

R 323.1240
Source: 1997 AACS.

R 323.1241
Source: 1997 AACS.

R 323.1242
Source: 1997 AACS.

PART 11. CONSTRUCTION GRANTS FOR WASTEWATER TREATMENT WORKS

R 323.1271
Source: 1998-2000 AACS.

R 323.1272
Source: 1998-2000 AACS.

R 323.1273
Source: 1998-2000 AACS.

R 323.1274
Source: 1998-2000 AACS.

R 323.1275
Source: 1998-2000 AACS.

R 323.1276
Source: 1998-2000 AACS.

R 323.1277
Source: 1998-2000 AACS.

R 323.1278
Source: 1998-2000 AACS.

R 323.1279
Source: 1998-2000 AACS.

R 323.1280
Source: 1998-2000 AACS.

R 323.1281
Source: 1998-2000 AACS.

R 323.1282
Source: 1998-2000 AACS.

R 323.1283
Source: 1998-2000 AACS.

R 323.1284
Source: 1998-2000 AACS.

R 323.1285
Source: 1998-2000 AACS.

R 323.1286
Source: 1998-2000 AACS.

R 323.1287
Source: 1998-2000 AACS.

R 323.1288
Source: 1998-2000 AACS.

PART 13. FLOODPLAINS AND FLOODWAYS

R 323.1311
Source: 1996 AACS.

R 323.1312
Source: 1996 AACS.

R 323.1313
Source: 1984 AACS.

R 323.1314
Source: 1998-2000 AACS.

R 323.1315
Source: 1998-2000 AACS.

R 323.1316
Source: 1996 AACS.

R 323.1329
Source: 1996 AACS.

PART 17. SOIL EROSION AND SEDIMENTATION CONTROL

R 323.1701
Source: 1998-2000 AACS.

R 323.1702
Source: 1998-2000 AACS.

R 323.1703
Source: 1998-2000 AACS.

R 323.1704
Source: 1998-2000 AACS.

R 323.1705
Source: 1998-2000 AACS.

R 323.1706
Source: 1998-2000 AACS.

R 323.1707
Source: 1998-2000 AACS.

R 323.1708
Source: 1998-2000 AACS.

R 323.1709
Source: 1998-2000 AACS.

R 323.1710
Source: 1998-2000 AACS.

R 323.1711
Source: 1998-2000 AACS.

R 323.1712
Source: 1998-2000 AACS.

R 323.1713
Source: 1998-2000 AACS.

R 323.1714
Source: 1998-2000 AACS.

PART 21. WASTEWATER DISCHARGE PERMITS

R 323.2101 Purpose.
Rule 2101. (1) These rules are being processed to implement the 1972 amendments to part 31 of the act which authorized the initiation of a waste or waste effluent discharge permit system compatible with the national pollutant discharge elimination system (NPDES). The NPDES has been initiated by the federal Congress through the enactment of the federal water pollution control act amendments of 1972, (33 U.S.C. §1251 et seq.). In general, the rules outline all of the following:
(a) The procedures by which all persons discharging wastes into the waters of the state shall apply for waste or waste effluent discharge permits as required by part 31 of the act.
(b) Exceptions to procedural requirements.
(c) Public participation procedures and hearings on permit applications.
(d) Procedures by which permits are issued or denied by the department.
(e) Appeals procedures.
(f) Permit conditions and monitoring of waste or wastewater discharges.
(2) The promulgation of these rules, in association with part 31 of the act, provides sufficient authority to the state, upon approval by the United States environmental protection agency, to issue permits for waste or wastewater discharges under the NPDES pursuant to section 402(b) of the United States Public Law 92-500 (33 U.S.C. §1251 et seq.). The department is the state agency designated by state law to administer this program.

History: 1954 ACS 77, Eff. Oct. 17, 1973; 1979 AC; 2003 MR 10, Eff. May 15, 2003.

R 323.2102 Definitions; A to F.
Rule 2102. As used in this part:
(a) "Act" means 1994 PA 451, MCL 324.3101 et seq., and the rules promulgated under the act.
(b) "Applicant" means a person who applies to the department for a state or national permit to discharge waste or wastewaters into the waters of the state by an NPDES application form or a state permit application form.
(c) "Application" means either the uniform national NPDES application form, including subsequent additions, revisions, or modifications thereof, promulgated by the administrator of EPA and adopted for use by the department or a state permit application form for applying for a permit.
(d) "Approved control plan" means the plan which is prepared by an authorized public agency, which is approved by the department pursuant to the provisions of section 9110 of part 91 of the act, and which contains the soil erosion and sedimentation control procedures that govern all construction activities normally undertaken by the authorized public agency.
(e) "Authorized public agency" means a state, local, or county agency that is designated pursuant to the provisions of section 9110 of part 91 of the act to implement soil erosion and sedimentation control requirements with regard to construction activities undertaken by the agency.
(f) "Authorized representative" means a person who has written authorization from the construction permittee to sign the notice of coverage in the name of the construction permittee.
(g) "Certified storm water operator" means an individual who has been certified by the department pursuant to the provisions of section 3110 of part 31 of the act as properly qualified to operate treatment or control facilities for storm water discharges.
(h) "Construction activity" means a man-made earth change or disturbance in the existing cover or topography of land for which a national permit is required pursuant to the provisions of 40 C.F.R. §122.26(a) (2000) and which is any of the following:
(i) Five acres or more in size and defined as a construction activity pursuant to the provisions of 40 C.F.R. §122.26(b)(14)(x) (2000).
(ii) One acre or more in size and defined as a small construction activity pursuant to the provisions of 40 C.F.R. §122.26(b)(15) (2000).
(iii) Less than 1 acre of total land area that is part of a larger common plan of development or sale if the larger common plan will ultimately disturb 1 acre or more.
The term includes clearing, grading, and excavating activities. The term does not include the practices of clearing, plowing, and tilling soil and harvesting for the purpose of crop production.
(i) "Construction permittee" means a person who is deemed to have a national permit pursuant to the provisions of R 323.2190 and who owns or holds a recorded easement on the property where a construction activity is located, is constructing in a public right-of-way in accordance with the provisions of sections 13, 14, 15, and 16 of 1925 PA 368, MCL 247.183, 247.184, 247.185, and 247.186 , or is the authorized public agency if a construction activity is carried out by the authorized public agency.
(j) "Department" means the director of the department of environmental quality or his or her designee to whom the director delegates a power or duty by written instrument.
(k) "Discharge" means any direct or indirect discharge of any waste, waste effluent, wastewater, pollutant, or any combination thereof into any of the waters of the state or upon the ground.
(l) "Discharger" means any person who discharges, directly or indirectly, any substance defined by section 3109 of part 31 of the act, any treated or untreated waste, waste effluent, wastewater, or pollutant; or cooling waters into any of the waters of the state or upon the ground.
(m) "Draft permit" means a draft of a permit which is proposed to be issued by the department, which is prepared by staff of the department before public notice of an application for a permit by a discharger, and which contains proposed effluent standards and limitations, proposed compliance schedules, and other proposed conditions or restrictions deemed necessary by the department for a discharge.
(n) "Effluent standards and limitations" means all state or federal effluent standards and limitations on quantities, rates, and concentrations of chemical, physical, biological, and other constituents to which a waste or wastewater discharge may be subject under the federal act or part 31 of the act, including all of the following:
(i) Effluent limitations.
(ii) Standards of performance.
(iii) Toxic effluent standards and prohibitions.
(iv) Pretreatment standards.

(v) Schedules of compliance.
(o) "EPA" means the United States environmental protection agency.
(p) "Fact sheet" means a description of a discharge which is available to the public, which is prepared by the department pursuant to the guidelines, and which includes all of the following information:
(i) Information on the location of the discharge.
(ii) Rate or frequency of the discharge.
(iii) Components of the discharge.
(iv) Proposed determinations of the department regarding the discharge.
(v) The location and identification of uses of the receiving waters.
(vi) Water quality standards and procedures for formulation of final determinations on the discharge by the department.
(q) "Federal act" means the federal water pollution control act, commonly referred to as the clean water act, Public Law 92-500, as amended by Public Law 95-217, Public Law 95-576, Public Law 96-483, Public Law 97-1171, and Public Law 100-4, 33 U.S.C. §1251 et seq., and the rules and regulations promulgated thereunder.
History: 1954 ACS 77, Eff. Oct. 17, 1973; 1979 AC; 1985 MR 3, Eff. Apr. 11, 1985; 1992 MR 10, Eff. Nov. 13, 1992; 2003 MR 10, Eff. May 15, 2003.

R 323.2103 Definitions; G to O.
Rule 2103. As used in this part:
(a) "General permit" means a national permit issued authorizing a category of similar discharges.
(b) "Guidelines" means the federal guidelines promulgated by EPA entitled "Part 123 - State Program Elements Necessary for Participation in the National Pollutant Discharge Elimination System," 40 C.F.R. §123 et seq.(1984).
(c) "Illicit connection" means a physical connection to a separate storm sewer that primarily conveys non-storm water discharges other than uncontaminated groundwater into the storm sewer; or a physical connection not authorized or permitted by the local authority, where a local authority requires authorization or a permit for physical connections.
(d) "Illicit discharge" means any discharge to, or seepage into, a separate storm sewer that is not composed entirely of storm water or uncontaminated groundwater. Illicit discharges include non-storm water discharges through pipes or other physical connections; dumping of motor vehicle fluids, household hazardous wastes, domestic animal wastes, or litter; collection and intentional dumping of grass clippings or leaf litter; or unauthorized discharges of sewage, industrial waste, restaurant wastes, or any other non-storm water waste directly into a separate storm sewer.
(e) "Industry" means a private person, corporation, firm, plant, or establishment that directly or indirectly discharges waste or wastewater into the waters of the state.
(f) "Local limit" means a specific prohibition or limit on discharges of pollutants or pollutant parameters by a nondomestic source to a POTW that are set by a POTW in accordance with an approved pretreatment program.
(g) "Mailing list" means a permanent list of persons who request notification and information on public hearings, permits, and other NPDES forms that is prepared and maintained by the department pursuant to the guidelines, these rules, and 1969 PA 306, MCL 24.201 et seq.
(h) "Management agency" means an areawide waste treatment management agency that is designated by the governor pursuant to the provisions of section 208(a) of the federal act.
(i) "Maximum extent practicable" or "MEP" means implementation of best management practices by a public body to comply with an approved storm water management program as required in a national permit for a municipal separate storm sewer system, in a manner that is environmentally beneficial, technically feasible, and within the public body's legal authority.
(j) "Minor discharge" means a discharge of wastewater which has a total volume of less than 50,000 gallons on every day of the year, which does not affect the waters of another state, and which is not identified by the department, the regional administrator, or by the administrator of EPA, in regulations issued by him or her pursuant to the provisions of section 307(a) of the federal act, as a discharge which is not a minor discharge, except that a discharge is not a minor discharge if there is a discharge of less than 50,000 gallons on any day of the year which represents 1 of 2 or more discharges from a single person, municipality, or industry that, in total, is more than 50,000 gallons on any day of the year.
(k) "Municipal separate storm sewer system" or "MS4" means all separate storm sewers that are owned or operated by the United States, a state, city, village, township, county, district, association, or other public body created by or pursuant to state law, having jurisdiction over disposal of sewage, industrial wastes, storm water, or other wastes, including special districts under state law, such as a sewer district, flood control district, or drainage district, or similar entity, or a designated or approved management agency under section 208 of the federal act that discharges to waters of the state. This term includes systems similar to separate storm sewer systems in municipalities, such as systems at military bases, large hospital or prison complexes, and highways and other thoroughfares. The term does not include separate storm sewers in very discrete areas, such as individual buildings.

(l) "National permit" means an NPDES permit, or equivalent document or requirements, issued by the department to a discharger pursuant to sections 3106 and 3112 of part 31 of the act for discharges into surface waters.
(m) "New source" means a building, structure, facility, or installation from which waste, pollutants, or wastewater is or may be discharged into the surface or groundwaters of the state or on the ground and for which construction was commenced after publication of proposed regulations by EPA prescribing a standard of performance pursuant to the provisions of section 306(a) of the federal act that will be applicable to the source if the standard is thereafter promulgated in accordance with the provisions of section 306 of the federal act.
(n) "Noncompliance list" means a list of dischargers, which is prepared by the department pursuant to these rules and the guidelines for transmittal to the regional administrator, who fail or refuse to comply with a compliance schedule in a permit issued pursuant to part 31 of the act.
(o) "Nondomestic source" or "source of nondomestic wastewater" means an industry, commercial establishment, or other entity that discharges wastewater to a publicly owned treatment works other than, or in addition to, water-carried wastes from toilet, kitchen, laundry, bathing, or other facilities that are used for household purposes.
(p) "NPDES" means the national pollutant discharge elimination system established by the federal act.
(q) "NPDES form" means any issued permit and any uniform national form which is used by the department, which is developed for use in the NPDES, and which is prescribed in regulations promulgated by the administrator of EPA, including an NPDES application and a reporting form.
(r) "On-site disposal system" means a natural system or mechanical device used to collect, treat, and discharge or reclaim wastewater from 1 or more dwelling units without the use of community-wide sewers or a centralized treatment facility.
History: 1954 ACS 77, Eff. Oct. 17, 1973; 1979 AC; 1985 MR 3, Eff. Apr. 11, 1985; 1992 MR 10, Eff. Nov. 13, 1992; 2003 MR 10, Eff. May 15, 2003.

R 323.2104 Definitions; P to W.
Rule 2104. As used in this part:
(a) "Part 91 permitting entity" means an agency that is designated by a county board of commissioners pursuant to the provisions of section 9105 of part 91 of the act; an agency that is designated by a city, village, or township in accordance with the provisions of section 9106 of part 91 of the act; or the department if the construction activity is under the jurisdiction of 2 or more municipal or county enforcing agencies; or the department for soil erosion and sedimentation activities under part 615 or part 631 pursuant to the provisions of section 9115 of part 91 of the act.
(b) "Person" means an individual, partnership, association, corporation, industry, or public body.
(c) "Point source discharge" means a discharge that is released to the waters of the state by a discernible, confined, and discrete conveyance, including any of the following from which wastewater is or may be discharged:
(i) A pipe.
(ii) A ditch.
(iii) A channel.
(iv) A tunnel.
(v) A conduit.
(vi) A well.
(vii) A discrete fissure.
(viii) A container.
(ix) A concentrated animal feeding operation.
(x) A vessel or other floating craft.
The term does not include a legally established county or intercounty drain, except for a county or intercounty drain that has a POTW designated as part of the drain or a discharge otherwise required to be authorized by a national permit.
(d) "Public body" means the United States, the state of Michigan, city, village, township, county, school district, public college or university, single purpose governmental agency; or any other body which is created by federal or state statute or law.
(e) "Publicly owned treatment works" or "POTW" means either of the following:
(i) A facility or facilities which are owned by a governmental entity and which are used or intended to be used for the collection and treatment of municipal wastewater, including sewage, liquid industrial waste, and storm water.
(ii) The owner or owners of a facility or facilities specified in paragraph (i) of this subdivision.
(f) "Regional administrator" means the EPA region V administrator.
(g) "Regulated MS4" means an MS4 that is required to have a national permit to discharge storm water into surface waters of

the state pursuant to R 323.2161(c), (d), (e), or (f).
(h) "Regulated pollutants" means all of the following:
(i) Pollutants that are limited by categorical pretreatment standards as defined in R 323.2302(g).
(ii) Pollutants for which control measures on nondomestic sources are necessary to avoid noncompliance with effluent limitations established in the POTW's discharge permit.
(iii) Pollutants for which control measures on nondomestic sources are necessary to avoid restricting the POTW's approved residuals management program.
(iv) Pollutants for which control measures on nondomestic sources are necessary to avoid operational problems at the treatment facility or collection system.
(i) "Reporting form" means the uniform NPDES reporting form, including subsequent additions, revisions, or modifications thereof, which is promulgated by the administrator of EPA and which is adopted by the department for use in administering these rules, or a state form that is prescribed by the department for use in administering these rules, for reporting data and information to the department by a discharger on monitoring and other conditions of permits.
(j) "Runoff coefficient" means the fraction of total rainfall that will appear at a conveyance as runoff.
(k) "Separate storm sewer system" means a system of drainage, including, but not limited to, roads, catch basins, curbs, gutters, parking lots, ditches, conduits, pumping devices, or man-made channels, which has the following characteristics:
(i) The system is not a combined sewer where storm water mixes with sanitary wastes.
(ii) The system is not part of a publicly owned treatment works (POTW).
(l) "Site" means the area where a construction activity is physically located or conducted, including adjacent land that is used in connection with the construction activity.
(m) "Soil erosion and sedimentation control permit" means a permit that is issued pursuant to the provisions of part 91 of the act by a part 91 permitting entity.
(n) "Soil erosion control measures" means the measures or procedures to prevent or reduce the pollution of waters of the state that are required in the soil erosion and sedimentation control permit for the site or the selected control measures from the approved control plan that are applicable to the site.
(o) "Stabilization of earth change activity" means the proper placement, grading, or covering of soil or rock at a construction activity to ensure subsequent resistance to soil erosion, sliding, or other earth movement.
(p) "State permit" means a permit or equivalent document or requirements that are issued by the department to a discharger who discharges wastewater on the ground or into groundwaters.
(q) "Storm water" means storm water runoff, snow melt runoff, and surface runoff and drainage.
(r) "Storm water discharge associated with industrial activity" means the discharge from any conveyance that is used for collecting and conveying storm water and that is directly related to manufacturing, processing, or raw materials storage areas at an industrial plant. The term does not include discharges from facilities or activities excluded from the national permits program under 40 C.F.R. §122.3 and §122.27 (2000). For the categories of industries identified in this subdivision, the term includes, but is not limited to, all of the following:
(i) Storm water discharges from industrial plant yards.
(ii) Immediate access roads and rail lines used or traveled by carriers of raw materials, manufactured products, waste material, or by-products used or created by the facility.
(iii) Material handling sites.
(iv) Refuse sites.
(v) Sites used for the application or disposal of process waste waters, as defined at 40 C.F.R. §401.11 (2000).
(vi) Sites used for the storage and maintenance of material handling equipment.
(vii) Sites used for residual treatment, storage, or disposal.
(viii) Shipping and receiving areas.
(ix) Manufacturing buildings.
(x) Storage areas, including tank farms, for raw materials and intermediate and final products.
(xi) Areas where industrial activity has taken place in the past and significant materials remain and are exposed to storm water.
For the purposes of this subdivision, material handling activities include storage, loading and unloading, transportation, or conveyance of any raw material, intermediate product, final product, by-product, or waste product.
The term excludes areas located on plant lands separate from the plant's industrial activities, such as office buildings and accompanying parking lots as long as the drainage from the excluded areas is not mixed with storm water drained from the areas described in this paragraph. Industrial facilities include facilities that are federally, state, or municipally owned or operated that meet the description of the facilities listed in the following paragraphs and those facilities designated by the department under the provisions of R 323.2161(1)(f). The following categories of facilities are considered to be engaging in "industrial activity" for purposes of this subdivision:

(i) Facilities subject to EPA promulgated storm water effluent limitations guidelines, new source performance standards, or toxic pollutant effluent standards, except facilities that have toxic pollutant effluent standards which are exempted under paragraph (x) of this subdivision.
(ii) Facilities classified as standard industrial classifications 24, except 2434, 26, except 265 and 267, 28, except 283, 29, 311, 32, except 323, 33, 3441, 373.
(iii) Facilities classified as standard industrial classifications 10 through 14, mineral industry, including active or inactive mining operations, except for areas of non-coal mining operations which were released from applicable state or federal reclamation requirements after December 17, 1990, and oil and gas exploration, production, processing, or treatment operations, or transmission facilities that discharge storm water contaminated by contact with or that has come into contact with, any overburden, raw material, intermediate products, finished products, byproducts, or waste products located on the site of operations. Inactive mining operations are mining sites which are not being actively mined, but which have an identifiable owner/operator. Inactive mining sites do not include sites where mining claims are being maintained before disturbances associated with the extraction, beneficiation, or processing of mined materials and do not include sites where minimal activities are undertaken for the sole purpose of maintaining a mining claim.
(iv) Hazardous waste treatment, storage, or disposal facilities, including those that are operating under interim status or a permit under subtitle c of the federal resource conservation and recovery act.
(v) Landfills, land application sites, and open dumps that receive or have received any industrial wastes, waste that is received from any of the facilities described under this subdivision, including those that are subject to regulation under subtitle D of the federal resource conservation and recovery act.
(vi) Facilities involved in the recycling of materials, including metal scrap yards, battery reclaimers, salvage yards, and automobile junkyards, which are classified as standard industrial classification 5015 and 5093.
(vii) Steam electric power generating facilities, including coal handling sites.
(viii) Transportation facilities classified as standard industrial classifications 40, 41, 42, except 4221 to 25, 43, 44, 45, and 5171 which have vehicle maintenance shops, equipment cleaning operations, or airport deicing operations. Only those portions of the facility that are either involved in vehicle maintenance, including vehicle rehabilitation, mechanical repairs, painting, fueling, and lubrication; equipment cleaning operations, airport deicing operations, or which are otherwise identified under paragraphs (i) to (vii), (ix), or (x) of this subdivision are associated with industrial activity.
(ix) Treatment works treating domestic sewage or any other sewage sludge or wastewater treatment device or system, used in the storage, treatment, recycling, and reclamation of municipal or domestic sewage, including land dedicated to the disposal of sewage sludge that is located within the confines of the facility, provided the system has a design flow of 1.0 million gallons per day or more, or is required to have an approved federal pretreatment program under 40 C.F.R. part 403 (2000). Not included are farm lands, domestic gardens, or lands used for sludge management where sludge is beneficially reused and which are not physically located in the confines of the facility, or areas that are in compliance with section 405 of the federal act.
(x) Facilities under standard industrial classifications 20, 21, 22, 23, 2434, 25, 265, 267, 27, 283, 285, 30, 31, except 311, 323, 34, except 3441, 35, 36, 37, except 373, 38, 39, and 4221 to 25.
(s) "Total maximum daily load" or "TMDL" means a written, quantitative plan and analysis for attaining and maintaining water quality standards in all seasons for a specific water body and pollutant.
(t) "Trade secret" means the whole or any portion or phase of any manufacturing proprietary process or method which is not patented, which is secret, which is useful in compounding an article of trade that has a commercial value, and the secrecy of which the owner has taken reasonable measures to prevent from becoming available to persons other than those selected by the owner to have access thereto for limited purposes. "Trade secret" shall not be construed, for purposes of these rules, to include any information relative to the quantum and character of waste products or their constituents discharged or sought to be discharged into waters of this state.
(u) "Urbanized area" means a place and the adjacent densely populated territory that together have a minimum population of 50,000 people, as defined by the United States bureau of the census and as determined by the latest available decennial census.
(v) "Urbanizing area" means an area of contiguous census blocks with population densities of 1,000 persons or more per square mile that together have a population of 10,000 people or more, as determined by the latest available decennial census.
(w) "Vessel" means any contrivance that is used or capable of being used for navigation upon water, whether or not the contrivance is capable of self-propulsion, including any of the following:
(i) Foreign and domestic vessels that are engaged in commerce upon the waters of the state.
(ii) Passenger or other cargo-carrying vessels.
(iii) Privately owned recreational watercraft.
(iv) Any other floating craft.
(x) "Waste" means any waste, wastewater, waste effluent, or pollutant that is discharged into water, including any of the

following:
(i) Dredged spoil.
(ii) Solid waste.
(iii) Incinerator residue.
(iv) Sewage.
(v) Garbage.
(vi) Sewage sludge.
(vii) Munitions.
(viii) Chemical wastes.
(ix) Biological materials.
(x) Radioactive materials.
(xi) Heat.
(xii) Wrecked or discarded equipment.
(xiii) Rock.
(xiv) Sand.
(xv) Cellar dirt.
(xvi) Industrial, municipal, and agricultural waste.
(y) "Wastewater" means liquid waste discharges directly or indirectly into the waters of the state that result from industrial and commercial processes and municipal operations, including liquid or water-carried process waste, cooling and condensing waters, and sanitary sewage.
(z) "Water quality standards" means the part 4 water quality standards promulgated pursuant to part 31 of Act No. 451 of the Public Acts of 1994, as amended, being rules 323.1041 through 323.1117 of the Michigan administrative code.
History: 1954 ACS 77, Eff. Oct. 17, 1973; 1979 AC; 1985 MR 3, Eff. Apr. 11, 1985; 1992 MR 10, Eff. Nov. 13, 1992; 2003 MR 10, Eff. May 15, 2003.

R 323.2106 Permit requirements of dischargers.
Rule 2106. (1) A person discharging wastes into the surface or groundwaters of the state or on the ground as a point source discharge, whether or not in compliance with an outstanding order of determination, final order of determination, or stipulation with the department, shall promptly make application for and obtain from the department a valid national or state permit pursuant to section 3112 or 3113 of part 31 of the act and according to procedures and deadlines set forth in these rules.
(2) A person proposing a waste or wastewater discharge to the surface or groundwaters of the state shall apply not less than 180 days before commencement of the discharge or any other time period before commencement of the discharge as determined and required by the department, for a national or state permit on an appropriate application form supplied by or approved by the department.
(3) A person discharging wastes into surface waters of the state shall apply to the department for a national permit. A person discharging wastes on the ground or into groundwaters shall apply to the department for a state permit. The procedures, forms, and deadlines required by these rules shall apply to applications for either national or state permits.
History: 1954 ACS 77, Eff. Oct. 17, 1973; 1979 AC; 2003 MR 10, Eff. May 15, 2003.

R 323.2108 Permits; application and filing procedures.
Rule 2108. (1) An application for a permit shall be completed in accordance with and subject to guidelines in 40 C.F.R. 122.21 (2000).
(2) A person discharging waste or wastewater from more than 1 location shall file a separate application for each discharge location. A single application may be filed for multiple outfalls discharging from a single location, except that the discharge from each outfall shall be described separately in the application.
History: 1954 ACS 77, Eff. Oct. 17, 1973; 1979 AC; 2003 MR 10, Eff. May 15, 2003.

R 323.2109 Permits; application exemptions.
Rule 2109. A person who discharges or proposes to discharge the following types of waste or wastewater shall not be required to apply for a permit from the department pursuant to part 31 of the act or these rules:
(a) Human sewage that is discharged from vessels.
(b) Water, gas, and other materials that are injected into a well to facilitate the production of oil or gas, or water that is derived in association with oil or gas production and disposed of in a well if authorized by the state supervisor of wells.
(c) A discharge that is directed solely to a publicly owned treatment works, but not from a publicly owned treatment works.
(d) Point source discharges of storm water, unless a person is required to apply for a national permit pursuant to R 323.2161.

History: 1954 ACS 77, Eff. Oct. 17, 1973; 1979 AC; 1992 MR 10, Eff. Nov. 13, 1992; 2003 MR 10, Eff. May 15, 2003.

R 323.2111. Rescinded.
History: 1954 ACS 77, Eff. Oct. 17, 1973; 1979 AC; rescinded 2003 MR 10, Eff. May 15, 2003.

R 323.2112 Permit applications; deficiencies; additional data requirements.
Rule 2112. (1) The department, at its discretion or upon request of the regional administrator, may request of an applicant any additional information deemed necessary to complete or correct deficiencies in the application before processing the application or issuing or denying the issuance of a permit. A national permit or state permit shall not be issued by the department until an application is complete or any further information requested by the department is supplied.
(2) The department shall take proper enforcement action as prescribed by part 31 of the act against any person who fails to file a complete application, if deficiencies are not corrected or incomplete information is not supplied within 60 days to the department following its request by the applicant.
History: 1954 ACS 77, Eff. Oct. 17, 1973; 1979 AC; 2003 MR 10, Eff. May 15, 2003.

R 323.2114 Permit applications and other NPDES forms; valid signatories.
Rule 2114. A state or national permit application form or any other NPDES form submitted to the department pursuant to these rules shall be signed as follows:
(a) For a corporation, by a principal executive officer of at least the level of vice president, or his or her designated representative, if the representative is responsible for the overall operation of the facility from which the discharge described in the permit application or other NPDES form originates.
(b) For a partnership, by a general partner.
(c) For a sole proprietorship, by the proprietor.
(d) For a municipal, state, or other public facility, by either a principal executive officer, the mayor, village president, city, or village manager, or other duly authorized employee.
History: 1954 ACS 77, Eff. Oct. 17, 1973; 1979 AC; 2003 MR 10, Eff. May 15, 2003.

R 323.2115 Permits; tentative determinations and draft permits.
Rule 2115. (1) Before public notice pursuant to R 323.2117 of a national or state permit application and when the department is satisfied that the application is complete, the staff of the department shall make preliminary determinations on the application, including a proposed determination to issue or deny a state or national permit for the discharge described in the application.
(2) If the proposed determination is to issue a state or national permit, then all of the following additional tentative determinations shall be made:
(a) Proposed effluent limitations shall be identified for the constituents proposed to be limited.
(b) A proposed schedule of compliance for meeting the proposed effluent limitations, including interim dates and requirements, if applicable.
(c) A description of any other proposed restrictions or other conditions determined necessary by the department which will significantly affect the discharge described in the application, including pretreatment standards for discharges into publicly owned treatment works.
(3) The department shall prepare a draft permit based upon the tentative determinations made pursuant to subrules (1) and (2) of this rule for the national or state permit application. The draft permit shall be mailed to the applicant and, in the case of a national permit, to the regional administrator before public notice of the application.
History: 1954 ACS 77, Eff. Oct. 17, 1973; 1979 AC; 2003 MR 10, Eff. May 15, 2003.

R 323.2117 Public notice of permit application and preliminary determinations.
Rule 2117. (1) The department shall prepare and sign a public notice of an application for a national permit, or a state permit as deemed appropriate by the department, and of the proposed determination to issue or deny a permit for the proposed or existing discharge identified in the application. The notice shall be circulated within the geographical area of the proposed or existing discharge in 1 or more of the following ways:
(a) Posting of the notice in the post office or other public buildings of the municipality nearest the premises of the applicant in which the discharge is or will be located.
(b) Posting of the notice at the entrance to the applicant's premises or nearby.
(c) Publishing the notice in 1 or more newspapers of general circulation in the area of the applicant, or if appropriate, in an applicable periodical.
(2) A copy of the notice shall be transmitted to the permit applicant and shall be available at the department office in Lansing

and at the department district office nearest to the geographical location of the applicant. Any person may make a written request for a copy of the notice which will be mailed to him or her.
History: 1954 ACS 77, Eff. Oct. 17, 1973; 1979 AC; 2003 MR 10, Eff. May 15, 2003.

R 323.2118 Public notice; contents and information.
Rule 2118. A public notice of a state or national permit application shall contain all of the following information:
(a) The date of posting or publication of the public notice.
(b) The address and telephone number of the department office in Lansing and the department district office nearest to the geographical location of the applicant.
(c) The name and address of the applicant.
(d) A concise description of the applicant's activities and operations which result in the discharge identified in the permit application.
(e) The name of the waterway to which the discharge is made or is proposed to be made, including the location of the proposed or existing discharge identified in the application.
(f) A statement of the department's tentative determination to issue or deny the permit for the discharge identified in the application.
(g) A concise description of the procedures for the formulation of final determinations including information on the comment period prescribed in R 323.2119 or other means by which interested persons may comment on the tentative determinations.
(h) The address and telephone number of the department office where more information on the application may be obtained or where copies of the draft permit prepared pursuant to R 323.2115 and fact sheets may be obtained and any other applicable NPDES forms and related documents may be inspected or copied.
History: 1954 ACS 77, Eff. Oct. 17, 1973; 1979 AC; 2003 MR 10, Eff. May 15, 2003.

R 323.2119 Public notice; comment period for interested persons.
Rule 2119. (1) Up to 30 days following the date of posting or publication of the public notice pursuant to R 323.2117, an interested person may submit his or her views in writing on the application or department tentative determinations, or both, to the department. The time for public comment may be extended by the department if it determines that an extension of time is necessary to facilitate additional public comment.
(2) All views submitted to the department in writing by interested persons during the comment period shall be retained and considered in the formulation of final determinations by the department on the permit application.
History: 1954 ACS 77, Eff. Oct. 17, 1973; 1979 AC; 2003 MR 10, Eff. May 15, 2003.

R 323.2121 Fact sheets on permit applications.
Rule 2121. (1) For each state or national permit application which identifies an existing or proposed discharge of 500,000 gallons or more for any day of the year, the department shall prepare and make available a fact sheet with respect to the application described in the public notice, which shall contain information prescribed by R 323.2122.
(2) The department may prepare a fact sheet for any existing or proposed discharge identified in an application of less than 500,000 gallons for any day of the year, if it deems the discharge is of significant importance to warrant additional information for public comment.
(3) A copy of the fact sheet shall be available at the department office in Lansing and at the department district office nearest to the geographical location of the applicant. Any person may request in writing a copy of the fact sheet which will be mailed to him or her.
History: 1954 ACS 77, Eff. Oct. 17, 1973; 1979 AC; 2003 MR 10, Eff. May 15, 2003.

R 323.2122 Fact sheets on permit applications; contents and information.
Rule 2122. The fact sheet prepared pursuant to R 323.2121 shall contain, but is not limited to, all of the following information:
(a) A sketch or detailed description of the location of the existing or proposed discharge described in the permit application.
(b) A quantitative description of the existing or proposed discharge including, but not limited to, all of the following information:
(i) Its rate or frequency or average daily flow.
(ii) Its summer and winter temperatures in degrees Fahrenheit and mixing zone information.
(iii) If the discharge is a thermal discharge subject to limitation under the federal act.
(iv) Its average daily discharge in pounds per day of any pollutants or other constituents subject to limitation under part 31 of

the act or the federal act or rules or regulations promulgated thereunder.
(c) The preliminary determinations made by the department on the permit application pursuant to R 323.2115.
(d) A concise citation of water quality standards, effluent limitations and standards, and mixing zones, if applicable, to be applied to the discharge, and the uses for which the receiving waters have been classified.
(e) A complete description of the procedures used by the department to formulate final determinations on the application and existing or proposed discharges, including the 30-day comment period on the public notice, procedures for requesting a public hearing on the application pursuant to R 323.2130 and other procedures to facilitate public comment and participation in the formulation of final determinations by the department.
History: 1954 ACS 77, Eff. Oct. 17, 1973; 1979 AC; 2003 MR 10, Eff. May 15, 2003.

R 323.2124 Public notices and fact sheets; mailing lists.
Rule 2124. (1) An interested person who desires to receive copies of all public notices or fact sheets, or both, on state or national permit applications for discharges in a geographical drainage area of the state as identified in subrule (2) of this rule, may request that his or her name be placed on a permanent mailing list of the department for the information. The request shall be made in writing to the department office in Lansing and shall be renewed in December of each year. Failure to renew the request is just cause for the department to remove a name from the mailing list.
(2) The written request of an interested person to the department shall clearly identify the name of the person, the person's address, the documents desired, and the geographical drainage area of the state for which information is requested. A separate request shall be made for each of the following geographical drainage areas of the state:
(a) Lake Michigan and tributaries thereto, entire.
(b) Lake Michigan and tributaries thereto, Upper Peninsula.
(c) Lake Michigan and tributaries thereto, Lower Peninsula.
(d) Lake Superior and tributaries thereto.
(e) Lake Huron and tributaries thereto.
(f) Lake Erie and tributaries thereto.
(g) St. Mary's river.
(h) Detroit river, Lake St. Clair, and St. Clair river and tributaries thereto.
History: 1954 ACS 77, Eff. Oct. 17, 1973; 1979 AC; 2003 MR 10, Eff. May 15, 2003.

R 323.2125 Public notices and fact sheets; notice to other governmental agencies.
Rule 2125. (1) Upon receipt of an application for a national permit which identifies an existing or proposed discharge into interstate waters, and when the department determines that the discharge may affect the quality of the waters of any other state, it shall notify the appropriate state or interstate agency of the discharge and shall transmit a copy of the public notice and fact sheet on the application thereto. Upon request of the state or interstate agency, the department shall also transmit a copy of the application and the draft permit prepared pursuant to R 323.2115.
(2) A state or interstate agency notified by the department pursuant to subrule (1) of this rule shall have 45 days in which to comment on the existing or proposed discharge and may submit in writing to the department and the regional administrator its views and recommendations. The views and recommendations submitted to the department by another state or interstate agency may be incorporated into the national permit if determined necessary and desirable by the department. If not incorporated into the national permit, the department shall notify the state or interstate agency in writing and provide an opportunity for hearing, if requested by the state or interstate agency.
(3) When a public notice on a national permit application for discharges into navigable waters is posted or published, the department shall transmit a copy of the notice and fact sheet thereon to the appropriate district engineer of the United States army corps of engineers for existing or proposed discharges identified therein, if such discharges are not minor discharges.
(4) If requested in writing thereby, the department shall mail a copy of a public notice or fact sheet, or both, for an application for a national or state permit, to any other federal, state, or local agency or affected Canadian provincial or federal agencies. The provisions of subrule (2) of this rule with regard to opportunity for comment and hearings apply to the federal, state, or local agencies, or Canadian provincial or federal agencies.
History: 1954 ACS 77, Eff. Oct. 17, 1973; 1979 AC; 2003 MR 10, Eff. May 15, 2003.

R 323.2126. Rescinded.
History: 1954 ACS 77, Eff. Oct. 17, 1973; 1979 AC; rescinded 2003 MR 10, Eff. May 15, 2003.

R 323.2127 Public access to NPDES forms and department files and records.
Rule 2127. A copy of a state or national permit application, public notice, fact sheet, draft permit, and other NPDES forms relating thereto, including written public comment thereon, and other reports, files, and information relating to the application

not classified as confidential information by the department pursuant to R 323.2128 shall be available for public inspection and copying during normal business hours at the department office in Lansing and an appropriate district office of the department in the geographical area of the applicant. Document inspection and copying procedures shall be according to R 323.1015.
History: 1954 ACS 77, Eff. Oct. 17, 1973; 1979 AC; 2003 MR 10, Eff. May 15, 2003.

R 323.2128 Confidential information.
Rule 2128. Upon determination by the department that public disclosure of information contained on any NPDES form, except information concerning effluent data or information from the files and records of the department not otherwise entitled to protection against disclosure by previous action of the department or of EPA, would divulge information entitled to protection as trade secrets of the applicant, the department shall label and otherwise handle the information as confidential, and shall notify and forward the information to the regional administrator. In making its determination of entitlement to protection as a trade secret, the department shall consider evidence submitted by the applicant. If the department denies entitlement to protection as a trade secret, the applicant, upon notification thereof, shall have 30 days in which to appeal the decision to the department. If the department determines, following appeal, that the information is not entitled to trade secret status, then the department, not less than 30 days after the applicant is notified of the decision, shall release the information for inspection or copying pursuant to R 323.2127. Where EPA has previously accorded trade secret status to information of an applicant, the department shall accept that finding as entitlement to trade secret status for the purpose of this rule. Unless otherwise determined by the regional administrator or the department, all information labeled by the department as confidential shall not be available to the public for inspection or copying pursuant to R 323.2127, except that the information shall be made available at any time to the regional administrator or other authorized representative of the United States concerned with carrying out part 31 of the act or the federal act, upon written request therefore.
History: 1954 ACS 77, Eff. Oct. 17, 1973; 1979 AC; 2003 MR 10, Eff. May 15, 2003.

R 323.2130 Permit applications; public hearings, determinations, and scheduling.
Rule 2130. (1) Within the 30-day comment period or other applicable comment period provided after posting or publishing of a public notice pursuant to R 323.2119, an applicant, any affected state or state or interstate agency or country, the regional administrator, or any other interested person or agency may file a petition with the department for a public hearing on an application for a state or national permit. A petition for a public hearing shall indicate the reasons why a hearing is requested, the interest in or relationship of the petitioner to the application or existing or proposed discharge identified therein, and specifically indicate which portions of the application or other NPDES form or information constitutes necessity for a public hearing. If the department determines that a petition constitutes sufficient cause or that there is sufficient public interest in an application for a public hearing, it may direct the scheduling of a hearing thereon.
(2) A hearing shall be scheduled not less than 4 weeks nor more than 8 weeks after the department determines the necessity of the hearing in the geographical location of the applicant or, at the discretion of the department, at another appropriate location, and shall be noticed not less than 30 days before the hearing in the same manner as the public notice on an application pursuant to R 323.2117 and R 323.2118. The notice of public hearing shall be transmitted to the applicant and shall be published in at least 1 newspaper of general circulation in the geographical area of the existing or proposed discharge identified on the permit application and shall be mailed to any person or group upon request therefore. Notice shall be mailed to all persons and governmental agencies which received a copy of the notice or the fact sheet for the permit application.
(3) The department may hold a single public hearing on related groups of permit applications.
History: 1954 ACS 77, Eff. Oct. 17, 1973; 1979 AC; 2003 MR 10, Eff. May 15, 2003.

R 323.2131 Permit applications; public hearing notice; contents.
Rule 2131. A notice by the department of a public hearing on an application shall contain, in addition to the time and place of the hearing, all of the following information:
(a) The address and telephone number of the department office in Lansing, and the appropriate district office of the department.
(b) The name and address of the applicant whose application will be considered at the public hearing.
(c) The name of the waterway to which a discharge, as identified on the application, is or will be made, and a concise description of the location on the waterway of the discharge.
(d) Reference to the public notice posted and published for the application, including the identification numbers and dates of issuance thereof.
(e) A brief statement of the purpose of the public hearing.
(f) A concise description of the issues which have been identified by the petitioners requesting the public hearing.
(g) The address or addresses of department offices where interested persons may inspect or obtain copies of a draft permit,

fact sheet, or other applicable NPDES forms or other reports, files, or information relating to an application subject to public hearing, if the documents have not been labeled confidential by the department pursuant to R 323.2128.
(h) A concise description of the nature of the public hearing and the issues to be heard, with reference to department rules and procedures to be followed.
History: 1954 ACS 77, Eff. Oct. 17, 1973; 1979 AC; 2003 MR 10, Eff. May 15, 2003.

R 323.2133 Permit applications; determinations; issuance; denial.
Rule 2133. (1) After review of tentative determinations or modifications thereof made by the staff of the department pursuant to R 323.2115, any comments on the permit application received by the department from the regional administrator pursuant to R 323.2112, comments received from the public during the 30-day comment period following public notice of the permit application as provided by R 323.2117, or other applicable recommendations or determinations, and review of the public hearing record after a hearing on an application pursuant to R 323.2130, the department shall make a final determination on the permit application and may issue or deny a state or national permit pursuant to section 3106 of part 31 of the act.
(2) An appeal to a final determination of the department made pursuant to subrule (1) of this rule, or to a condition of a permit issued, or the denial of a permit pursuant to part 31 of the act and the rules shall be in accordance with and subject to section 3113 of part 31 of the act.
(3) When the department issues a state or national permit to a discharger in possession of an order of determination or stipulation of the department issued or entered into before April 15, 1973, the state or national permit conditions shall take precedence over all conditions of the order of determination or stipulation. If the department denies the issuance of a state or national permit to a discharger in possession of an order of determination or stipulation of the department, compliance with the conditions of the order of determination or stipulation is not a defense of the discharger's obligation as prescribed by part 31 of the act.
(4) A national permit issued by the department pursuant to part 31 of the act and these rules is a state permit where the permit is issued for waste or wastewater discharges into the surface waters of the state. A state permit issued for a waste or wastewater discharge into groundwaters or on the ground is not a national permit required pursuant to the federal act.
History: 1954 ACS 77, Eff. Oct. 17, 1973; 1979 AC; 2003 MR 10, Eff. May 15, 2003.

R 323.2134 Permits; transmittal to EPA.
Rule 2134. The department shall transmit all copies of national permits issued by the department pursuant to part 31 of the act and these rules to the regional administrator immediately following issuance. If a permit is denied, written notice thereof and the reasons therefore shall be transmitted to the regional administrator.
History: 1954 ACS 77, Eff. Oct. 17, 1973; 1979 AC; 2003 MR 10, Eff. May 15, 2003.

R 323.2136 Terms and conditions of permits; prohibited discharges.
Rule 2136. (1) A permit shall not be issued to a person proposing any of the following discharges:
(a) A discharge containing a radiological, chemical, or biological warfare agent, or a high-level radioactive waste.
(b) A discharge containing a substance which the department determines would substantially impair anchorage, or navigation, or both.
(c) A point source discharge in conflict with an areawide waste treatment management plan or amendments thereto, prepared by a management agency pursuant to section 208(b) of the federal act, unless the department finds the variance necessary to protect the public health, safety, and welfare.
(2) An NPDES permit will not be issued to a person proposing any of the following discharges into waters subject to regulation under the federal act:
(a) A discharge containing a radiological, chemical, or biological warfare agent, or a high-level radioactive waste.
(b) A discharge containing a substance which, as determined by the secretary of the army acting through the chief of engineers of the United States army corps of engineers, would substantially impair anchorage, or navigation, or both.
(c) A discharge to which the regional administrator objects in writing to the department pursuant to R 323.2112, pursuant to any right to object provided the administrator of EPA in section 402(d) of the federal act.
(d) A point source discharge in conflict with an areawide waste treatment management plan, or amendments thereto, prepared by a management agency pursuant to section 208(b) of the federal act unless otherwise approved by EPA.
History: 1954 ACS 77, Eff. Oct. 17, 1973; 1979 AC; 2003 MR 10, Eff. May 15, 2003.

R 323.2137 Terms and conditions of permits; effluent standards and limitations.
Rule 2137. When applicable, a permit issued by the department shall contain terms and conditions deemed necessary by the department to ensure compliance with at least the following effluent standards and limitations:
(a) Effluent limitations for publicly owned treatment works and other point source discharges when promulgated by the administrator of EPA pursuant to sections 301, 302, 307, and 308 of the federal act, in accordance with and subject to the date of compliance prescribed therein, if the limitations are not in conflict with part 31 of the act or the federal act.
(b) Standards of performance, when promulgated by the administrator of EPA, for new sources within the categories defined in section 306 of the federal act.
(c) If the permit is for a discharge from a publicly owned treatment works, standards of performance, pretreatment standards or effluent limitations or prohibitions when promulgated by the administrator of EPA for toxic substances, monitoring, and charges pursuant to sections 204(b), 307, and 308 of the federal act, if the standards, limitations, or prohibitions are not in conflict with part 31 of the act or the federal act.
(d) Any other more stringent limitation deemed necessary by the department to meet applicable water quality standards, treatment standards, or schedules of compliance established pursuant to part 31 of the act or rules promulgated pursuant thereto, or necessary to meet other federal law or regulation enacted or promulgated subsequent to these rules, or required to meet any applicable water quality standards, including applicable requirements necessary to meet maximum daily loads established by and incorporated into the state's continuing planning process required pursuant to section 303 of the federal act.
History: 1954 ACS 77, Eff. Oct. 17, 1973; 1979 AC; 2003 MR 10, Eff. May 15, 2003.

R 323.2138 Terms and conditions of permits; consistency with water quality standards.
Rule 2138. When a state or national permit is issued by the department which contains any effluent standards or limitations set forth in R 323.2137, the department shall verify that the discharge authorized by the issued permit will not violate applicable water quality standards. When a permit contains additional effluent limitations based upon applicable water quality standards, the department shall prepare a wasteload allocation ensuring that the discharge authorized by the issued permit is consistent with applicable water quality standards.
History: 1954 ACS 77, Eff. Oct. 17, 1973; 1979 AC; 2003 MR 10, Eff. May 15, 2003.

R 323.2139 Terms and conditions of permits; requirements to comply with plans.
Rule 2139. The department, if it deems necessary, may impose any further requirements under the terms and conditions of a state or national permit to comply with an areawide waste treatment management plan, or amendments thereto, prepared by a management agency pursuant to section 208(b) of the federal act.
History: 1954 ACS 77, Eff. Oct. 17, 1973; 1979 AC; 2003 MR 10, Eff. May 15, 2003.

R 323.2140 Terms and conditions of permits; interim requirements.
Rule 2140. Before promulgation of regulations by the administrator of EPA relating to applicable effluent standards or limitations, or standards of performance set forth in R 323.2137, the department may impose any standard, limitation, or condition within a state or federal permit to ensure compliance with part 31 of the act and the federal act.
History: 1954 ACS 77, Eff. Oct. 17, 1973; 1979 AC; 2003 MR 10, Eff. May 15, 2003.

R 323.2141 Terms and conditions of permits; discharges from vessels.
Rule 2141. (1) If a national permit is issued pursuant to part 31 of the act and these rules for the discharge of wastes from a vessel other than human sewage exempted by R 323.2109, the permit shall contain requirements in accordance with and subject to the applicable regulations promulgated by the secretary of the federal department in which the United States coast guard is operating, which establish specifications for transportation, handling, carriage, storage, and stowage of such wastes.
(2) The department shall issue a national permit for the discharge of wastes from a vessel only when the permit is in conformance with part 95 of the act.
History: 1954 ACS 77, Eff. Oct. 17, 1973; 1979 AC; 2003 MR 10, Eff. May 15, 2003.

R 323.2142 Terms and conditions of permits; other limitations and requirements.
Rule 2142. When issuing a state or national permit pursuant to part 31 of the act and these rules, the department shall specify therein, where applicable, average and maximum daily quantitative limitations for the level of wastewater constituents in terms of weight and, if appropriate, average or maximum concentration limits for the wastes in the discharge authorized by the issued permit.

History: 1954 ACS 77, Eff. Oct. 17, 1973; 1979 AC; 2003 MR 10, Eff. May 15, 2003.

R 323.2145 Terms and conditions of permits; schedules of compliance.
Rule 2145. (1) A person issued a state or national permit by the department pursuant to R 323.2133 who is not in compliance with applicable effluent standards and limitations or other requirements conditioned therein at the time the permit is issued shall achieve compliance within a period of time as set forth by the department, with effluent standards and limitations, with water quality standards, or with specific requirements or conditions set by the department. The department shall require compliance with terms and conditions of the permit in the shortest reasonable period of time as determined thereby, or within a time schedule for compliance which shall be specified in the issued permit.
(2) If a time schedule for compliance specified in a state or national permit which is established by the department pursuant to subrule (1) of this rule is more than 9 months, then the time schedule shall provide for interim dates of achievement for compliance with certain applicable terms and conditions of the permit. Each interim date specified in the permit shall not be more than 9 months and, to the extent practicable, shall fall on March 31, June 30, September 30, or December 31.
History: 1954 ACS 77, Eff. Oct. 17, 1973; 1979 AC; 2003 MR 10, Eff. May 15, 2003.

R 323.2146 Terms and conditions of permits; compliance reports by dischargers.
Rule 2146. Within 14 days after an interim date of compliance or the final date of compliance specified in a state or national permit, a permittee shall provide the department with written notice of his or her compliance or noncompliance with the requirements or conditions specified to be completed by that date. Failure to submit the written notice to the department is just cause for the department to pursue enforcement action against the discharger pursuant to part 31 of the act or these rules.
History: 1954 ACS 77, Eff. Oct. 17, 1973; 1979 AC; 2003 MR 10, Eff. May 15, 2003.

R 323.2147 Noncompliance lists.
Rule 2147. (1) The department shall prepare and submit to the regional administrator, on or before February 28, May 31, August 31, and November 30, a list of all dischargers holding national permits which, as of 30 days before the date of the report, have submitted a report to the department pursuant to R 323.2146 showing noncompliance with requirements set forth by the department to be met on interim dates or on the final date of compliance specified in the permit and those which have not filed a timely report. The noncompliance list shall be available to the public at appropriate department offices for inspection and copying, and shall contain all of the following information:
(a) The name and address of each noncomplying permittee.
(b) A concise description of the nature of noncompliance.
(c) A description of proposed actions to be taken by the department or the permittee to correct the noncompliance.
(d) Any other information deemed necessary by the department to explain or mitigate an instance of noncompliance.
(2) A discharger who fails or refuses to comply with an interim or final date of compliance specified in a state or national permit may be deemed by the department to be in violation of the permit and may be subject to enforcement action prescribed in part 31 of the act or these rules.
History: 1954 ACS 77, Eff. Oct. 17, 1973; 1979 AC; 2003 MR 10, Eff. May 15, 2003.

R 323.2149 Other terms and conditions of state and national permits.
Rule 2149. (1) As part of the condition for issuing a state or national permit by the department pursuant to these rules, a discharger shall assure the department of all of the following:
(a) All discharges authorized by the permit are consistent with the terms and conditions of the permit and that the permittee will make all reasonable effort to meet any interim or final dates of compliance specified in the permit.
(b) Any facility expansion, production increases, process modifications, changes in discharge volume, or other changes in operations or conditions of the permittee which may result in a new or increased discharge of waste or wastewater shall be reported to the department by submission of a new application for a state or national permit pursuant to R 323.2108, or if the discharge does not violate effluent limitations specified in the permit, by submission to the department of notice of a new or increased discharge.
(c) The permittee shall allow any authorized department representative to enter upon the permittee's premises at any reasonable time, upon presentation of credentials, to have access to and copy any applicable records, to inspect process facilities, treatment works, monitoring methods or equipment therefore, or to sample any effluent of a discharge authorized by a permit.
(d) At all times the permittee shall maintain in good working order and operate as efficiently as possible any facilities or systems of control installed to achieve compliance with the terms and conditions of a permit.

(2) Before the department issues a state or national permit for a discharge from the publicly owned treatment works, it shall secure assurance from the applicant that it will be notified of all of the following:
(a) Any new introduction of waste or wastewater constituents into the treatment works from a source which would be a new source as defined in section 306 of the federal act if the source were discharging wastewater constituents.
(b) Except as to categories and classes of point sources or discharges specified by the department, any new introduction of waste or wastewater constituents into the treatment works from a source which would be subject to section 301 of the federal act if the source were discharging waste or wastewater constituents.
(c) Any substantial change in volume or character of waste or wastewater constituents being introduced into such treatment works by a source discharging wastewater into the treatment works at the time of issuance of a permit.
(3) If a permit is issued by the department for a discharge from a publicly owned treatment works, the permittee shall require any industrial user of the treatment works to comply with the requirements of sections 204(b), 307, and 308 of the federal act. To ensure compliance, a permittee shall require of each industrial user subject to the requirements of section 307 of the federal act to submit periodic notice over intervals, of not more than 9 months, of progress toward full compliance with section 307 requirements. The permittee shall forward a copy of the periodic notice to the department.
History: 1954 ACS 77, Eff. Oct. 17, 1973; 1979 AC; 2003 MR 10, Eff. May 15, 2003.

R 323.2150 Duration of permits.
Rule 2150. A state or national permit issued pursuant to part 31 of the act and these rules shall have a fixed term which shall not be more than 5 years. A person who wishes to continue to discharge waste or wastewater into the surface or groundwaters of the state or on the ground shall apply for reissuance of a permit pursuant to R 323.2151.
History: 1954 ACS 77, Eff. Oct. 17, 1973; 1979 AC; 2003 MR 10, Eff. May 15, 2003.

R 323.2151 Review and reissuance of state and national permits.
Rule 2151. (1) Not less than 180 days before the expiration date of a state or national permit issued by the department pursuant to part 31 of the act and these rules, a permittee who wishes to continue the discharge of waste or wastewaters into the surface or groundwaters of the state or on the ground shall submit a written request to the department for reissuance.
(2) After receipt of written request for reissuance of a state or national permit by a permittee, the department shall review the request, and before reissuing a permit shall be assured by the permittee of all of the following:
(a) The permittee is in compliance with or has substantially complied with the terms, conditions, requirements, and schedules of compliance of the existing state or national permit.
(b) The department has up-to-date information on the permittee's production levels, waste treatment practices, and the nature, contents, and frequency of the permittee's discharge. The information shall be available to the department either through the submission of new NPDES forms by the permittee or by means of monitoring records or reports submitted thereto pursuant to R 323.2155.
(c) The discharge is consistent with applicable effluent standards and limitations, water quality standards, and other legally applicable requirements, including any additions to, or revisions or modifications of, the effluent standards and limitations, water quality standards, or other legally applicable requirements during the term of the permit.
(3) The department shall follow the public notice and public participation procedures specified in R 323.2117 to R 323.2119 and R 323.2124 to R 323.2127 before any state or national permit is reissued pursuant to this rule.
(4) A copy of a national permit reissued by the department shall be transmitted to the regional administrator with any other appropriate NPDES forms or other applicable information relating thereto.
History: 1954 ACS 77, Eff. Oct. 17, 1973; 1979 AC; 2003 MR 10, Eff. May 15, 2003.

R 323.2153 Point source discharges; standards of performance.
Rule 2153. A facility, building, installation, or industry which discharges a point source discharge subject to a national permit and which is so constructed after October 18, 1972, to meet all applicable effluent standards of performance as required by the federal act, part 31 of the act, or these rules, shall not be subject to any more stringent standard of performance for any wastewater constituent during a 10-year period beginning on the date of completion of construction, or during the period of depreciation or amortization of the facility for the purposes of section 167, or 169, or both, of the internal revenue code of 1954, 26 U.S.C. §167 or 169, whichever period ends first, unless reallocation of effluent loads are necessitated in a discharge complex to meet water quality standards.
History: 1954 ACS 77, Eff. Oct. 17, 1973; 1979 AC; 2003 MR 10, Eff. May 15, 2003.

R 323.2154 Monitoring of discharges authorized by permits; requirements.
Rule 2154. (1) The department may set forth monitoring requirements of any discharge authorized by a state or national permit issued by it pursuant to these rules. In requiring any discharge monitoring, the department shall specify the type of

monitoring required, and the discharger shall obtain approval of the installation, use, and maintenance of monitoring equipment or methods to be employed therefore from the department.
(2) A discharge authorized by a national permit which the regional administrator, by written request to the department, requires to be monitored or which contains toxic waste or wastewater constituents for which an effluent standard or limitation has been established by the administrator of EPA pursuant to section 307(a) of the federal act, shall be monitored by the permittee for any or all of the following:
(a) The flow of the discharge in gallons per day or other volumes required by the department.
(b) Waste or wastewater constituents subject to reduction or elimination under the terms and conditions of the permit.
(c) Specific waste or wastewater constituents which are determined by the department to have a significant effect on the quality of the waters of the state.
(d) Waste or wastewater constituents specified as subject to monitoring by the administrator of EPA in regulations promulgated pursuant to the federal act.
(e) Any other specific waste or wastewater constituents which the regional administrator may request in writing to be monitored.
(3) The frequency of monitoring of a waste or wastewater discharge required to be monitored pursuant to this rule shall be specified in a state or national permit when issued, except that the department at any time may require additional monitoring by notification of the permittee in writing.
History: 1954 ACS 77, Eff. Oct. 17, 1973; 1979 AC; 2003 MR 10, Eff. May 15, 2003.

R 323.2155 Monitoring of discharges authorized by permits; recording and reporting.
Rule 2155. (1) A permittee required to monitor a waste or wastewater discharge pursuant to R 323.2154, shall maintain records of all information resulting from such monitoring, including the date, place, and time of sampling; dates analyses were performed; the person performing the analyses; the analytical techniques, procedures, or methods used; and the results of the analyses. All records and results of monitoring activities, and calibration and maintenance records shall be retained by the permittee a minimum of 3 years unless otherwise required or extended by the department or the regional administrator.
(2) The department may require a permittee to report periodically the results of all monitoring activities undertaken on an appropriate reporting form supplied by the department. The department shall notify the permittee of the frequency of reporting, but the reporting frequency shall not be less than at least once in a period of 1 year.
(3) Upon written request of the regional administrator, the department shall transmit thereto any reporting form or other monitoring information required by this rule.
History: 1954 ACS 77, Eff. Oct. 17, 1973; 1979 AC; 2003 MR 10, Eff. May 15, 2003.

R 323.2159 State and national permits; modification or revocation by the department.
Rule 2159. (1) The department may modify any term or condition, including a schedule of compliance, of a permit, or may revoke a permit upon its finding of any of the following:
(a) There is a change in any condition that requires a temporary or permanent reduction or elimination of a permitted discharge or constituent thereof.
(b) The administrator of EPA issues a regulation prescribing a restriction or prohibition of a waste or wastewater constituent which is not covered by the terms and conditions of a permit, or the regulation is more stringent than any limitation imposed on a wastewater constituent in a permit.
(c) A modification of the terms and conditions of a permit or a time schedule thereon is necessary because of an act of God or other conditions beyond the control of the permittee.
(d) In the case of discharges from publicly owned treatment works, federal treatment works grant funds are not available or are not sufficient to allow construction of the treatment works in a time schedule set forth in the permit.
(e) There is a violation of any term or condition of the permit.
(f) The permittee has obtained a permit by misrepresentation or has failed to disclose all relevant facts to the commission.
(g) A toxic effluent standard or prohibition, including any schedule of compliance specified therein, is established pursuant to section 307(a) of the federal act for a toxic waste or wastewater constituent which is present in the permittee's discharge and the standard or prohibition is more stringent than any limitation upon the waste or wastewater constituent in the permit.
(h) The POTW receives wastewater from a nondomestic source and the development of a pretreatment program is necessary to control the introduction of regulated pollutants.
(i) When a request for removal credits is approved in accordance with R 323.2313(a).
(2) The department shall notify the regional administrator of any change in status or condition of a permit and he or she shall have an opportunity to object thereto, in writing, within 45 days before the effective date of the modification. If the regional administrator objects in writing, then the objection shall be resolved before the modification is approved by the department, unless the right to object is waived, in writing, by the regional administrator.

(3) A permittee who is affected by a modification of a permit by the department shall be notified not less than 90 days before the effective date of the modification and, upon petition therefore, shall have a hearing thereon pursuant to section 3112 of part 31 of the act.
(4) If the department modifies an effluent limitation or a schedule of compliance in a permit, notice of the modification shall be mailed to all persons on the department mailing list for public notices and fact sheets as prescribed by R 323.2124, and any interested person may comment thereon within 30 days following the date of notification.
History: 1954 ACS 77, Eff. Oct. 17, 1973; 1979 AC; 1985 MR 3, Eff. Apr. 11, 1985; 2003 MR 10, Eff. May 15, 2003.

R 323.2160 Enforcement.
Rule 2160. (1) A person who submits false information to the department on an application, other NPDES form, or any other reporting form, or who violates any of these rules, a term, condition, or schedule of compliance contained within a valid state or national permit, or part 31 of the act is subject to the remedies or penalties prescribed by section 3115 of part 31 of the act.
(2) The department shall notify the regional administrator of all violations of these rules, a valid permit, or part 31 of the act, and of the means by which the department proposes to correct or require the correction of violations.
History: 1954 ACS 77, Eff. Oct. 17, 1973; 1979 AC; 2003 MR 10, Eff. May 15, 2003.

R 323.2161 Storm water discharge permits.
Rule 2161. (1) A person who discharges storm water that is subject to regulation pursuant to the provisions of section 402(p) of the federal act and the corresponding regulations promulgated in 40 C.F.R. §122.26 (2000) shall apply for or obtain a national permit by March 10, 2003, or earlier where another date is specified, if the person has, will have, or operates any of the following:
(a) Storm water discharges associated with industrial activity. If a facility is not owned or operated by a public body that serves a population of less than 100,000, other than an airport, power plant, or uncontrolled sanitary landfill, the permit application was to have been submitted to the department by October 1, 1992. A national permit is not required if, in accordance with 40 C.F.R. §122.26(g) (2000), a discharge composed entirely of storm water is not a storm water discharge associated with industrial activity because there is no exposure of industrial materials and activities to rain, snow, snowmelt or runoff, or any combination, and if the discharger has met the conditions of no exposure listed on a certification form provided by the department. The discharger shall complete, sign, and submit to the department the certification form provided by the department. A new certification form shall be submitted once every 5 years to qualify for continuation of the no exposure exclusion. This exclusion provision shall no longer apply and a national permit shall be required under either of the following conditions:
(i) If circumstances change and industrial materials or activities become exposed to rain, snow, snowmelt and/or runoff, or any combination, then the conditions for this exclusion no longer apply. Any conditionally exempt discharger who anticipates changes in circumstances shall apply for and obtain national permit authorization before the change of circumstances. Failure to do so could result in penalties as provided under part 31 of the act for a discharge without a permit.
(ii) Notwithstanding the provisions of this subdivision, the department retains the authority to require national permit authorization, and deny this exclusion, upon making a determination that the discharge causes, has a reasonable potential to cause, or contributes to, a violation of an applicable water quality standard.
(b) Storm water discharges from a site of construction activity. After October 1, 1992, the notice of coverage shall be received before the startup of construction for any storm water discharge from a site of construction activity disturbing 5 acres or more that is not conducted by a public body serving a population of less than 100,000.
(c) An MS4 located in an urbanized area, except those exempted through cooperation with a permitted MS4 owner or operator under R 323.2161(2). Only storm water that flows from within the urbanized area is regulated.
(d) An MS4 located within an urbanizing area, which is designated by the department to need a national permit on the basis that it discharges storm water which results in a violation of water quality standards or which would imminently result in a violation of water quality standards in the absence of regulation.
(e) Designation from the department that storm water controls are needed for the discharge based on wasteload allocations that are part of total maximum daily loads (TMDLs) developed by the department that address the pollutants of concern.
(f) A discharge, or category of discharges within a geographic area, that is determined by the department to be a significant contributor of pollutants to waters of the state, or to contribute to a violation of water quality standards, or to contribute substantially to the pollutant loadings of a physically interconnected, regulated MS4.
(g) A storm water discharge that is the subject of a petition to the department to require a national permit, and the department determines that the discharger shall apply for a national permit in accordance with subdivision (f) of this subrule.
(2) If a national permit application is required for a municipal separate storm sewer system under subdivision (c), (d), (e), or

(f) of this subrule, then each city, village, or township with the power or authority to control storm water discharges to the regulated MS4 shall apply for a national permit. An MS4 owner or operator other than a city, village, or township may cooperate with a permitted MS4 owner or operator so that the terms and conditions of the national permit may be met by the permitted MS4 owner or operator for the other owner or operator's municipal separate storm sewer system or systems in the regulated area. In this case, the MS4 owner or operator that is not a city, village, or township does not need to apply for a national permit. An MS4 owner or operator that is not a city, village, or township that cannot reach a cooperative agreement with the permitted MS4 owner or operator shall apply for a national permit for the MS4 it owns or operates.
(3) A person who is designated by the department to be regulated in accordance with subrule (1)(d), (e), or (f) of this rule shall apply to the department for a national permit within 180 days of receipt of notice from the department that a national permit is needed, unless permission for a later date is granted by the department. This subrule does not apply to storm water discharged from a site of construction activity.
History: 1992 MR 10, Eff. Nov. 13, 1992; 2003 MR 10, Eff. May 15, 2003.

R 323.2161a Municipal storm water discharge; national permit minimum requirements.
Rule 2161a. (1) The national permit for a regulated MS4 shall require, at a minimum, that the permittee develop, implement, and enforce a storm water management program designed to do both of the following:
(a) Reduce the discharge of storm water pollutants to the maximum extent practicable (MEP).
(b) Protect water quality and satisfy the appropriate water quality requirements of the federal act.
(2) Unless authorized to discharge under an individual national permit applied for under 40 C.F.R. §122.26(d) (2000) or authorized to discharge under another permit that the regional administrator has determined is adequate to meet the requirements of the federal act, a person with a national permit for a regulated MS4 shall comply with the requirements of 40 C.F.R. §122.34 (2000) as specified in R 323.2161a(3) to (12).
(3) A storm water management program for a regulated MS4 shall include a plan for implementing, at a minimum, the measures described as follows:
(a) A public education program to distribute educational materials to the community or conduct equivalent outreach activities about the impacts of storm water discharges on water bodies and the steps that the public can take to reduce pollutants in storm water runoff.
(b) At a minimum, comply with state and local public notice requirements when implementing a public involvement/participation program.
(c) A program to detect and eliminate illicit connections and discharges. Under the illicit discharge elimination program, a permittee shall, at a minimum, perform all of the following:
(i) Develop, if not already completed, a storm sewer system map, showing the location of all outfalls the permittee owns or operates, or points of discharge into an MS4 owned or operated by another public body, and the names and location of all waters of the state that receive discharges from the permittee's MS4.
(ii) Develop and implement a plan to detect and address non-storm water discharges to the municipal separate storm sewer system, including illegal dumping and failing on-site sewage disposal systems as appropriate.
(iii) Inform public employees, businesses, and the general public of hazards associated with illegal discharges and improper disposal of waste into the municipal separate storm sewer system.
(iv) To the extent allowable under state or local law, effectively prohibit, through ordinance, or other regulatory mechanism, non-storm water discharges into the municipal separate storm sewer system and implement appropriate enforcement procedures and actions. Discharges already authorized under an NPDES permit are excluded from this requirement. Discharges or flows from fire fighting activities are excluded from the effective prohibition against non-storm water and need only be addressed where they are identified as significant sources of pollutants to waters of the state. The following categories of non-storm water discharges or flows need to be prohibited only if identified as significant contributors to violations of state water quality standards:
(A) Water line flushing.
(B) Landscape irrigation.
(C) Diverted stream flows.
(D) Rising ground waters.
(E) Uncontaminated ground water seepage into storm sewers.
(F) Uncontaminated pumped ground water, except for groundwater cleanups.
(G) Discharges from potable water sources.
(H) Foundation drains.
(I) Air conditioning condensation.
(J) Irrigation water.
(K) Springs.

(L) Water from crawl space pumps.
(M) Footing drains.
(N) Lawn watering.
(O) Water from noncommercial car washing.
(P) Flows from riparian habitats and wetlands.
(Q) Residential swimming pool discharges and dechlorinated swimming pool discharges.
(R) Street wash water.
(d) A storm water management program for areas of construction activity, which shall include all of the following:
(i) A procedure to notify the part 91 permitting entity and the department when soil or sediment are deposited to the regulated MS4 from a construction activity in violation of section 9116 of part 91 of the act or in violation of the effective prohibition on non-storm water discharges into the regulated MS4 separate storm sewer system as required in subdivision (c)(iv) of this subrule.
(ii) A procedure to ensure adequate allowance for soil erosion and sedimentation controls on preliminary site plans, as applicable.
(iii) A procedure for receipt and consideration of complaints or other information submitted by the public.
(e) A program to address post-construction storm water runoff from new development and redevelopment projects that disturb 1 or more acres, including projects less than 1 acre that are part of a larger common plan of development or sale, that discharge into the regulated MS4. The program shall include an ordinance or other regulatory mechanism to address post-construction runoff from new development and redevelopment projects to the extent allowable under state or local law. The ordinance or other regulatory mechanism shall be designed to prevent or minimize water quality impacts, including resource impairment resulting from extreme flow volumes and flow conditions, and shall include all of the following:
(i) A requirement for review of post-construction storm water best management practices during initial site plan review, as applicable.
(ii) Strategies for implementation of structural or non-structural, or both, best management practices appropriate for the community.
(iii) Requirements for adequate long-term operation and maintenance of best management practices.
(f) An operation and storm water maintenance program that includes a staff training component and has the ultimate goal of preventing or reducing pollutant runoff from municipal operations, using training materials that are available from EPA, the state, or other organizations. The storm water management program shall include employee training to prevent and reduce storm water pollution from activities such as park and open space maintenance, fleet and building maintenance, new construction and land disturbances, and storm water system maintenance.
(4) A city, village, or township shall comply with the terms and conditions of its national MS4 permit in all areas within its political or territorial boundaries for which a permit application is required under R 323.2161(1)(c), (d), (e), or (f).
(5) A public body, other than a city, village, or township, that holds a national permit for a municipal separate storm sewer system or systems it owns or operates, shall comply with the terms and conditions of the national permit for the municipal separate storm drain sewer system or systems it owns or operates and for which a national permit application was submitted in accordance with R 323.2161(1)(c), (d), (e), or (f).
(6) If an existing qualifying local program requires the permittee to implement 1 or more of the minimum control measures of subrule (3) of this rule, the department may include conditions in the national permit that direct the permittee to follow that qualifying program's requirements rather than the requirements of subrule (3) of this rule. A qualifying local program is a local or state municipal storm water management program that imposes, at a minimum, the relevant requirements of subrule (3) of this rule.
(7) To request authorization to discharge in accordance with a general permit for a municipal separate storm sewer system, a public body shall submit to the department, on a form provided by the department, a national permit application which shall include the name of a contact person responsible for implementing or coordinating the storm water management program.
(8) A permittee shall comply with any more stringent effluent limitations in the national permit, including permit requirements that modify, or are in addition to, the minimum measures based on a total maximum daily load (TMDL) or equivalent analysis. The department may include more stringent limitations based on a TMDL or equivalent analysis that determines that more stringent limitations are needed to protect water quality.
(9) A permittee shall comply with other applicable national permit requirements, standards, and conditions established in the individual or general permit, developed consistent with the provisions of 40 C.F.R. §§122.41 to 122.49 (2000), as appropriate.
(10) A permittee shall evaluate compliance with the minimum measures required under subrule (3) of this rule, the appropriateness of the best management practices implemented to comply with the minimum measures, and progress towards achieving the measurable goals reported pursuant to subrule (12)(a)(ii) of this rule. The department may establish monitoring requirements in accordance with state or watershed specific monitoring plans or as needed for a permittee to demonstrate the

pollution reduction achieved by implementing best management practices.
(11) A permittee shall keep records required by the national permit for not less than 3 years. A permittee shall submit the records to the NPDES authority if specifically asked to do so. The records, including a description of the storm water management program, shall be available to the public at reasonable times during regular business hours unless confidentiality is protected under 40 C.F.R. §122.7 (2000).
(12) A permittee shall submit annual reports to the department for the first permit term. For subsequent permit terms, the permittee shall submit reports in years 2 and 4 unless the department or national permit requires more frequent reports. The department may establish a reporting format that shall be followed by the permittee. Unless the department specifies otherwise, the annual reports shall include the following minimum information:
(a) The first annual report submitted by a permittee for approval by the department shall consist of a storm water management program plan which includes descriptions of all of the following:
(i) The best management practices that will be implemented for each of the storm water minimum measures specified in subrule (3)(a) to (f) of this rule.
(ii) Measurable goals for each of the best management practices, including, as appropriate, the years in which the required actions will be undertaken, interim milestones, the frequency of the action, anticipated water quality benefit, and a description of water quality monitoring, if any, during the reporting period. The permittee is not required to meet the measurable goals identified in the first annual report in order to demonstrate compliance with any minimum measure in subrule (2)(c) to (f) of this rule for which the department has not issued a menu of best management practices. If the department does not issue a menu of best management practices, the permittee still shall comply with other requirements of the national permit, including good faith implementation of best management practices designed to comply with the minimum measures.
(iii) A summary of the storm water control activities to be undertaken during the next reporting cycle pursuant to the storm water management program plan.
(iv) The status of the water quality in the waters of the state within the permittee's political, territorial, property, or right-of-way boundaries. Narrative descriptions and/or numeric descriptions may be submitted. Narrative descriptions may include, but are not limited to, reports of unnatural physical properties such as turbidity, color, oil film, floating solids, foams, settleable solids, suspended solids or deposits, presence or absence of indicator animals, algae or bacteria, presence of trash and floatables, and streambank and streambed conditions. For numeric descriptions, permittees may seek alternatives to instream water chemistry monitoring or may limit chemical monitoring to a small number of parameters. Biological indexes are acceptable numeric descriptions. Permittees may partner to gather information, or may report information collected by other entities including county, state, or federal governments.
(v) An identification and prioritization of the stresses on the receiving waters within the permittee's political, territorial, property, or right-of-way boundaries. Stresses are negative impacts on surface water quality, navigation, industrial water supply, public water supply at the point of water intake, fish and other indigenous aquatic life and wildlife, human body contact recreation, and agricultural uses. Stresses include known or suspected pollutant sources that result in water quality status concerns reported under paragraph (iv) of this subdivision.
(vi) Notice that the permittee is relying on another owner or operator of a regulated MS4 to satisfy national permit obligations under 1 or both of the following conditions:
(A) The permittee lacks power or authority to comply with the national permit obligation.
(B) The other regulated MS4 owner or operator is already implementing a program that meets the national permit obligation for the permittee.
(vii) Notice provided under paragraph (vi) of this subrule is valid only if the other regulated MS4 owner or operator has national permit authorization to discharge and provides notice under paragraph (viii) of this subdivision for the applicable national permit obligations.
(viii) Notice that the permittee will satisfy some of the national permit obligations of another regulated MS4 owner or operator, if applicable.
(ix) A city, village, or township permittee shall submit to the department the identification of regulated MS4 owners and operators other than itself within its political or territorial boundaries that have applied for or will apply for national permits, and shall submit descriptions of either the MS4s or the areas within its boundaries for which the other regulated MS4 owners and operators claim authority.
(b) All annual reports subsequent to the first annual report shall include all of the following information:
(i) The status of compliance with the storm water management program plan and other national permit conditions for which the permittee is responsible, an assessment of the appropriateness of the best management practices identified in the storm water management program plan, and an assessment of progress towards achieving the identified measurable goals for each of the best management practices.
(ii) Results of information collected and analyzed, including monitoring data, if any, during the reporting period.
(iii) A summary of the storm water activities to be undertaken during the next reporting cycle pursuant to the storm water

management program plan.
(iv) Notice of a change in any identified best management practices or measurable goals for any of the minimum measures.
(v) A description of change in status of any agreement or agreements used by the permittee to rely on another public body to satisfy some of the national permit obligations, if applicable.
History: 2003 MR 10, Eff. May 15, 2003.

R 323.2162
Source: 1997 AACS.

R 323.2163
Source: 1997 AACS.

R 323.2164
Source: 1997 AACS.

R 323.2165
Source: 1997 AACS.

R 323.2166
Source: 1997 AACS.

R 323.2167
Source: 1997 AACS.

R 323.2168
Source: 1997 AACS.

R 323.2169
Source: 1997 AACS.

R 323.2170
Source: 1997 AACS.

R 323.2172
Source: 1997 AACS.

R 323.2173
Source: 1997 AACS.

R 323.2174
Source: 1997 AACS.

R 323.2175
Source: 1997 AACS.

R 323.2176
Source: 1997 AACS.

R 323.2177
Source: 1997 AACS.

R 323.2178
Source: 1997 AACS.

R 323.2179
Source: 1997 AACS.

R 323.2180

Source: 1997 AACS.

R 323.2181
Source: 1997 AACS.

R 323.2182
Source: 1997 AACS.

R 323.2183
Source: 1997 AACS.

R 323.2184
Source: 1997 AACS.

R 323.2185
Source: 1997 AACS.

R 323.2186
Source: 1997 AACS.

R 323.2189 Referenced federal regulations; definitions; adoption of standards by reference.
Rule 2189. (1) As used in the federal regulations referenced in R 323.2161, the terms "NPDES state" and "NPDES authority" shall mean the department of environmental quality as specified in this rule.
(2) The following federal regulations are adopted by reference in these rules, are available for inspection at the Lansing office of the department of environmental quality, and may be obtained from the Department of Environmental Quality, Water Division, P.O. Box 30273, Lansing, MI 48909, at a cost as of the time of adoption of these rules of 5 cents per page and a labor rate of $19.20 per hour, or from the Superintendent of Documents, Government Printing Office, Washington, DC 20402, at a cost as of the time of the adoption of these rules of $66.00, or via the Internet at http://www.access.gpo.gov/nara:
(a) 40 C.F.R. §§122.3 (2000).
(b) 40 C.F.R. §122.7. (2000).
(c) 40 C.F.R. §§122.21 (2000).
(d) 40 C.F.R. §122.26 to 27 (2000).
(e) 40 C.F.R. §122.28(b)(2)(v) (2000).
(f) 40 C.F.R. §122.34 to 35 (2000).
(g) 40 C.F.R. §§122.41 to 122.49 (2000).
(h) 40 C.F.R. §122, appendix G (2000).
(i) 40 C.F.R. §123 et seq. (1984).
(j) 40 C.F.R. §401.11 (2000).
(k) 40 C.F.R. §403 (2000).
History: 1985 MR 3, Eff. Apr. 11, 1985; 1990 MR 8, Eff. Aug. 21, 1990; 1992 MR 10, Eff. Nov. 13, 1992; 1995 MR 8, Eff. Sept. 8, 1995; 2003 MR 10, Eff. May 15, 2003.

R 323.2190 National permit for storm water discharge from construction activity.
Rule 2190. (1) Unless the department has required an individual national permit pursuant to the provisions of subrule (3) or (4) of this rule, a point source discharge of storm water from a construction activity will be deemed to have a national permit authorizing the discharge if the criteria of subdivisions (A) and (B) of this subrule is met. Exception: after March 10, 2003, small construction activities, meaning 1 to 5 acres of disturbed soil as defined in R 323.2102(h)(ii) or (iii), are automatically deemed to have a national permit authorizing discharge of storm water in accordance with this rule and are not required to meet the filing requirements of subdivision(a) or (b) of this subrule, subrule (2)(j) of this rule, and subrule(5)(b) of this rule. The construction permittee shall do both of the following:
(a) File with the department, on a form approved by the department, notice of coverage pursuant to the provisions of this rule before the initiation of construction activity. The notice of coverage shall include all of the following:
(i) A copy of the individual soil erosion and sedimentation control permit for the site as issued to the construction permittee; or if the construction activity is to be carried out by an authorized public agency, certification by the authorized public agency that an approved control plan exists; or, for part 615 or part 631 permits, a copy of the permit, along with any forms or diagrams pertaining to soil erosion and sedimentation control that were part of the permit application.
(ii) Acknowledgement by the construction permittee that any discharge that is made pursuant to the provisions of this rule

shall be in compliance with part 31 of the act and the rules promulgated thereunder.
(iii) A location map and a description of the nature of the construction activity.
(iv) The location of the proposed discharge and identification of the receiving water.
(v) The total area of the site and the area of the site that is expected to undergo construction activity during the life of the project.
(vi) Name and certification number of a certified storm water operator responsible for inspection of the construction activity in accordance with subrule (2)(e) of this rule.
(b) Provide a valid signature of the construction permittee or authorized representative on the notice of coverage. If the construction permittee is a partnership, association, corporation, industry, municipality, state agency, or interstate body, the valid signatory for the notice of coverage shall be determined in accordance with R 323.2114.
(2) A construction permittee that has authorization to discharge under a national permit pursuant to subrule (1) of this rule shall comply with all of the following provisions:
(a) Not directly or indirectly discharge wastes such as discarded building materials, concrete truck washout, chemicals, lubricants, fuels, litter, sanitary waste, or any other substance at the construction site into the waters of the state in violation of part 31 of the act or rules promulgated thereunder.
(b) Be in compliance with a soil erosion and sedimentation control permit for the site or, if the construction activity is carried out by an authorized public agency, the approved control plan, including the selected control measures that are applicable to the site.
(c) Properly maintain and operate the soil erosion control measures.
(d) Have the soil erosion control measures under the specific supervision and control of a storm water operator who has been certified by the department as properly qualified to operate the soil erosion control measures. The certification shall be done in accordance with the requirements of R 323.1251 et seq.
(e) Cause the construction activity to be inspected by a certified storm water operator once per week, and within 24 hours after every precipitation event that results in a discharge from the site, and ensure that any needed corrective actions are carried out. A log of the inspections and corrective actions shall be maintained on file by the construction permittee for review and shall be retained by the construction permittee for a period of 3 years from the date of the inspection or corrective action.
(f) In accordance with the requirements for on-land facilities as set forth in spillage of oil and polluting materials, being part 5 of these rules, provide facilities and comply with reporting procedures for containment of any accidental losses of oil or other polluting materials.
(g) Dispose of solids, sediment, filter backwash, or other waste that is removed from or results from the treatment or control of storm water in compliance with applicable state laws and regulations and in a manner that prevents any waste from entering waters of the state.
(h) Allow the department to enter upon the site at any reasonable time before the expiration of the authorization to discharge as set forth in subrule (5) of this rule, upon presentation of credentials and other documents as may be required by law, for the purpose of inspecting conditions relating to the pollution of any waters or determining compliance with the provisions of this rule.
(i) Upon request, make available for public inspection or provide to the department all reports or logs prepared pursuant to the provisions of this rule.
(j) File a revised notice of coverage in compliance with the provisions of subrule (1) of this rule before any expansion of the construction activity or change in the soil erosion control measures that requires a change in the soil erosion and sedimentation control permit.
(3) The department may require that discharges from a construction activity be authorized by an individual national permit if it has been determined by the department that unlawful pollution cannot be adequately guarded against, and there is or may be water quality degradation that will violate the commission act unless requirements in addition to those in the soil erosion and sedimentation control permit are imposed. A determination by the department for an individual national permit or other additional control constitutes grounds for revocation of the authorization to discharge pursuant to the provisions of this rule.
(4) The department may require that discharges from a construction activity be authorized by an individual national permit if it has been determined by the department that the responsible part 91 permitting entity or authorized public agency is not carrying out a program that is adequate to ensure that the requirements of part 91 of the act are complied with.
(5) The authorization to discharge pursuant to the provisions of this rule expires as follows:
(a) When the soil erosion and sedimentation control permit expires, or is revoked or terminated by the part 91 permitting entity in accordance with the provisions of part 91 of the act and 1969 PA 306, MCL 24.201 et seq., or when the authorized public agency determines that the project has been completed by the stabilization of earth change activity.
(b) Five years from the date of the notice that is filed pursuant to the provisions of subrule (1)(a) of this rule, if the authorization to discharge has not previously expired pursuant to subdivision (a) of this subrule. This authorization may be

extended by filing a new notice in compliance with the provisions of subrule (1)(a) of this rule. The construction permittee shall file a notice of termination with the department, on a form approved by the department, when authorization to discharge expires as set forth in accordance with subdivision (a) of this subrule. The notice of termination shall include the name and address of the construction permittee, the location of the construction site, and the mailing address, if available, and certification that stabilization of earth change activity has been completed or, if the certification cannot be made, the reason why the authorization to discharge has expired.
(6) The department may revoke authorization to discharge pursuant to the provisions of this rule if an individual national permit is required pursuant to the provisions of subrule (3) of this rule or in compliance with R 323.2159.
(7) Nothing in this rule shall be construed to preclude the institution of any legal action or relieve the construction permittee from any responsibilities, liabilities, or penalties to which the construction permittee may be subject pursuant to part 31 of the act or rules promulgated thereunder.
(8) The provisions of this rule are severable, and if any provision of this rule or the application of any provisions of this rule to any circumstances is held invalid, the application of the provisions of this rule to other circumstances and the remainder of this rule shall not be affected by the invalidity.
(9) The construction permittee shall take all reasonable steps to minimize any adverse impact to the surface or groundwaters of the state that result from noncompliance with any of the conditions specified in this rule.
(10) If, for any reason, the construction permittee does not comply with, or will be unable to comply with, any of the conditions that are specified in this rule, the construction permittee shall provide the department with the following information, in writing, within 5 days of becoming aware of the noncompliance or inability to comply:
(a) A description of the noncompliance and its cause.
(b) The period of noncompliance, including exact dates and times, or, if the noncompliance is not corrected, the anticipated time that the noncompliance is expected to continue and the steps taken to reduce, eliminate, and prevent recurrence of the noncompliance.
(11) The provisions of this rule do not convey any property rights in either real or personal property, or any exclusive privileges, authorize any pollution, impairment, or destruction of the natural resources of the state, or the violation of any federal, state, or local laws or regulations, or obviate the necessity of obtaining permits or approvals from other units of government as may be required by law.
(12) The provisions of this rule do not exempt the construction permittee from giving notice to public utilities and complying with each of the requirements of 1974 PA 53, MCL 460.701 et seq.
(13) This rule shall not provide authorization to discharge storm water from construction activity which is mixed with non-storm water, or which is subject to an existing national permit or general permit.
History: 1992 MR 10, Eff. Nov. 13, 1992; 2003 MR 10, Eff. May 15, 2003.

R 323.2191 General permits generally.
Rule 2191. (1) Upon a determination by the department that certain discharges are appropriately and adequately controlled by a general permit, the department may issue a general permit to cover a category of discharge. The general permit may cover storm water point source discharges or a category of point source discharges other than storm water point source discharges if all of the following provisions apply:
(a) The sources involve the same or substantially similar types of operations.
(b) The sources discharge the same types of wastes.
(c) The sources require the same effluent limitation or operating conditions.
(d) The sources require the same or similar monitoring.
(2) General permits shall be issued, modified, revoked and reissued, or terminated in compliance with these rules.
(3) The department may require any person who is authorized to make a discharge, by a general permit, to apply for and obtain an individual national permit if any of the following circumstances apply:
(a) The discharge is a significant contributor to pollution as determined by the department on a case-by-case basis.
(b) The discharger is not complying, or has not complied, with the conditions of the general permit.
(c) A change has occurred in the availability of demonstrated technology or practices for the control or abatement of waste applicable to the point source discharge.
(d) Effluent standards and limitations are promulgated for point source discharges subject to the general permit.
(e) The department determines that the criteria under which the general permit was issued no longer apply. Any person may request the department to take action pursuant to the provisions of this subrule.
(4) If the department requires a person who is authorized to make a discharge, by a general permit, to apply for an individual national permit as provided in subrule (3) of this rule, the department shall do so in writing. Written notice shall include all of the following:
(a) A statement of the reasons for the department's decision.

(b) An application form.
(c) A statement setting the date by which the owner or operator shall file the application.
(d) A statement that on the effective date of the individual national permit, the general permit, as it applies to the individual discharge, will be superseded.
(5) Any person having a discharge which is authorized, or proposing a discharge which may be authorized by a general permit, may request to be excluded from the coverage of the general permit and apply for an individual national permit. An application shall be submitted pursuant to these rules, with reasons supporting the request, to the department. The department may deny an application for an individual national permit if it determines that the general permit is more appropriate.
(6) The issuance of an individual national permit to a person will supersede the applicability of the general permit on the effective date of the individual national permit.
History: 1992 MR 10, Eff. Nov. 13, 1992; 2003 MR 10, Eff. May 15, 2003.

R 323.2192 General permits; application and coverage.
Rule 2192. All of the following provisions are application requirements for coverage under general permits and shall be complied with:
(a) A person who requests coverage under a general permit shall comply with all applicable requirements of this part, except where the department has approved an amended application form that is specific to a general permit.
(b) Upon the receipt of an application for coverage under an existing general permit, the department shall determine if the discharge meets the criteria for coverage under the general permit. The issuance of a notice of coverage by the department which states that the discharge meets the criteria initiates coverage by the general permit.
(c) The department shall promptly report to the department each person having a discharge for which coverage by general permit has been initiated pursuant to the provisions of subdivision (b) of this rule. A person who is aggrieved by the coverage may file a sworn petition for a contested case hearing on the matter with the department in accordance with the provisions of section 3113 of part 31 of the act. A petition that is filed more than 60 days after coverage by the general permit is reported to the department may be rejected by the department as being untimely.
(d) A person who holds an individual national permit for a point source discharge that is excluded from a general permit solely because the person already has an individual national permit may apply for coverage under the general permit. The department may terminate the individual national permit and include the discharge under the coverage of the general permit if the department determines that the general permit is more appropriate.
History: 1992 MR 10, Eff. Nov. 13, 1992; 2003 MR 10, Eff. May 15, 2003.

R 323.2193 National permit; clean corporate citizen benefits.
Rule 2193. An establishment that has been designated as a clean corporate citizen by the department under R 324.1504 is eligible for the following benefits related to national permits:
(a) A clean corporate citizen applying for reissuance of a national permit may certify that the previous application information, or a portion of the application, is still representative of the discharge, and need not provide new discharge monitoring information, unless there have been changes in state or federal application requirements since the previous application was submitted. The department may request additional information as necessary to process the permit.
(b) When applying for a national permit for a new wastewater discharge that is not covered by a federal technology-based treatment standard, a clean corporate citizen may provide its determination of best professional judgment (BPJ) for technology-based effluent limitations for the case-by-case determinations required under section 402(a)(1) of the federal act. The department will review and use the clean corporate citizen's determination of BPJ for purposes of a draft permit, unless the determination is inconsistent with state or federal regulations, or is contrary to known technology previously used in setting BPJ permit limitations.
(c) A clean corporate citizen that qualifies for coverage under a general permit as provided in R 323.2191 is not required to obtain an individual national permit solely because it is designated as a major discharger by the United States environmental protection agency.
(d) A nonmunicipal clean corporate citizen may construct and utilize wastewater treatment processes to comply with effluent limitations of a national permit without department approval of the plans and specifications for the wastewater treatment processes.
(e) The department shall not conduct more than 1 comprehensive sampling inspection during the effective period of the national permit for a clean corporate citizen, unless the department has reason to believe that the permittee is not in compliance with any applicable statute, rule, national permit, or enforcement order.
(f) The national permit for a clean corporate citizen shall include a provision allowing the department to reduce, but not eliminate, the monitoring frequency of parameters specified in the permit. The department may reduce monitoring. Reduced

monitoring shall be sufficient to determine compliance and will be conditioned on continued compliance with parameter limitations. If reduced monitoring identifies a violation of a parameter limitation, then the permit shall provide for an increase in monitoring until compliance is regained. A clean corporate citizen shall submit a request for reduced monitoring to the department in writing. Approval of reduced monitoring under this rule is not subject to the requirements in R 323.2159.
(g) Unless otherwise required by the department, or as necessary for a complete application for national permit reissuance, upon request, the department shall authorize a clean corporate citizen to submit discharge monitoring reports on an annual basis. This provision does not abrogate the permittee's responsibility to report instances of noncompliance required to be reported by statute, rule, national permit, or enforcement order.
(h) The department shall expedite its response to a request from a clean corporate citizen to use a water treatment additive.
History: 2000 MR 3, Eff. Mar. 24, 2000; 2003 MR 10, Eff. May 15, 2003.

R 323.2194
Source: 1998-2000 AACS.

R 323.2195. Termination of benefits.
Rule 2195. Upon termination of a clean corporate citizen designation, the department shall terminate or restrict all benefits provided to a former clean corporate citizen under R 323.2193 and R 323.2194 as provided in this part and as determined by the department.
History: 2000 MR 3, Eff. Mar. 24, 2000; 2003 MR 10, Eff. May 15, 2003.

PART 22. GROUNDWATER QUALITY

R 323.2201
Source: 1998-2000 AACS.

R 323.2202
Source: 1998-2000 AACS.

R 323.2203
Source: 1998-2000 AACS.

R 323.2204
Source: 1998-2000 AACS.

R 323.2205
Source: 1998-2000 AACS.

R 323.2206
Source: 1998-2000 AACS.

R 323.2207
Source: 1998-2000 AACS.

R 323.2208
Source: 1998-2000 AACS.

R 323.2209
Source: 1998-2000 AACS.

R 323.2210
Source: 1998-2000 AACS.

R 323.2211
Source: 1998-2000 AACS.

R 323.2212
Source: 1998-2000 AACS.

R 323.
Source: 1998-2000 AACS.

R 323.2214
Source: 1998-2000 AACS.

R 323.2215
Source: 1998-2000 AACS.

R 323.2216
Source: 1998-2000 AACS.

R 323.2217
Source: 1998-2000 AACS.

R 323.2218
Source: 1998-2000 AACS.

R 323.2219
Source: 1998-2000 AACS.

R 323.2220
Source: 1998-2000 AACS.

R 323.2221
Source: 1998-2000 AACS.

R 323.2222
Source: 1998-2000 AACS.

R 323.2223
Source: 1998-2000 AACS.

R 323.2224
Source: 1998-2000 AACS.

R 323.2225
Source: 1998-2000 AACS.

R 323.2226
Source: 1998-2000 AACS.

R 323.2227
Source: 1998-2000 AACS.

R 323.2229
Source: 1998-2000 AACS.

R 323.2230
Source: 1998-2000 AACS.

R 323.2231
Source: 1998-2000 AACS.

R 323.2232
Source: 1998-2000 AACS.

R 323.2233
Source: 1998-2000 AACS.

R 323.2234
Source: 1998-2000 AACS.

R 323.2235
Source: 1998-2000 AACS.

R 323.2237
Source: 1998-2000 AACS.

R 323.2238
Source: 1998-2000 AACS.

R 323.2240
Source: 1998-2000 AACS.

PART 23. PRETREATMENT

R 323.2301
Source: 1995 AACS.

R 323.2302
Source: 1995 AACS.

R 323.2303
Source: 1995 AACS.

R 323.2304
Source: 1995 AACS.

R 323.2305
Source: 1995 AACS.

R 323.2306
Source: 1995 AACS.

R 323.2307
Source: 1995 AACS.

R 323.2308
Source: 1995 AACS.

R 323.2309
Source: 1995 AACS.

R 323.2310
Source: 1995 AACS.

R 323.2311
Source: 1995 AACS.

R 323.2312
Source: 1995 AACS.

R 323.2313

Source: 1995 AACS.

R 323.2314
Source: 1995 AACS.

R 323.2315
Source: 1995 AACS.

R 323.2316
Source: 1995 AACS.

R 323.2317
Source: 1995 AACS.

DEPARTMENT OF ENVIRONMENTAL QUALITY

SURFACE WATER QUALITY DIVISION

WATER RESOURCES PROTECTION

PART 24. LAND APPLICATION OF BIOSOLIDS

R 323.2401
Source: 1998-2000 AACS.

R 323.2402
Source: 1998-2000 AACS.

R 323.2403
Source: 1998-2000 AACS.

R 323.2404
Source: 1998-2000 AACS.

R 323.2405
Source: 1998-2000 AACS.

R 323.2406
Source: 1998-2000 AACS.

R 323.2407
Source: 1998-2000 AACS.

R 323.2408
Source: 1998-2000 AACS.

R 323.2409
Source: 1998-2000 AACS.

R 323.2410
Source: 1998-2000 AACS.

R 323.2411
Source: 1998-2000 AACS.

R 323.2412
Source: 1998-2000 AACS.

R 323.2413
Source: 1998-2000 AACS.

R 323.2414
Source: 1998-2000 AACS.

R 323.2415
Source: 1998-2000 AACS.

R 323.2416
Source: 1998-2000 AACS.

R 323.2417
Source: 1998-2000 AACS.

R 323.2418
Source: 1998-2000 AACS.

SURFACE WATER QUALITY DIVISION

WATER RESOURCES PROTECTION

PART 30. WATER QUALITY TRADING

R 323.3001
Source: 2002 AACS.

R 323.3002
Source: 2002 AACS.

R 323.3003
Source: 2002 AACS.

R 323.3004
Source: 2002 AACS.

R 323.3005
Source: 2002 AACS.

R 323.3006
Source: 2002 AACS.

R 323.3007
Source: 2002 AACS.

R 323.3008
Source: 2002 AACS.

R 323.3009
Source: 2002 AACS.

R 323.3010
Source: 2002 AACS.

R 323.3012
Source: 2002 AACS.

R 323.3013
Source: 2002 AACS.

R 323.3014
Source: 2002 AACS.

R 323.3015
Source: 2002 AACS.

R 323.3016
Source: 2002 AACS.

R 323.3017
Source: 2002 AACS.

R 323.3018
Source: 2002 AACS.

R 323.3019
Source: 2002 AACS.

R 323.3020
Source: 2002 AACS.

R 323.3021
Source: 2002 AACS.

R 323.3022
Source: 2002 AACS.

R 323.3023
Source: 2002 AACS.

R 323.3024
Source: 2002 AACS.

R 323.3025
Source: 2002 AACS.

R 323.3026
Source: 2002 AACS.

R 323.3027
Source: 2002 AACS.

DEPARTMENT OF ENVIRONMENTAL QUALITY

LAND AND WATER MANAGEMENT DIVISION

INLAND LAKES AND WETLANDS UNIT

AQUATIC NUISANCE CONTROL

R 323.3101 Definitions.
Rule 1. As used in these rules:
(a) "Act" means 1978 pa 368, mcl 333.12561 et seq.
(b) "Active ingredient" means an ingredient that will prevent, destroy, repel, or control target organisms, act as a plant

regulator, defoliant, or desiccant, or otherwise alter the behavior of plants or chemicals.
(c) "Algae" means any of the group of nonvascular aquatic plants which do not have stems, flowers, leaves, and roots, and which are single-celled, colonial, or filamentous forms.
(d) “Applicant” means any of the following entities:
(i) A person who is the bottomland owner.
(ii) A lake board established under part 309 of 1994 PA 451.
(iii) A state or local government.
(iv) A person who has written authorization to act on behalf of an entity specified in this subdivision.
(e) "Aquatic nuisance" means any organism which lives or propagates, or both, within the aquatic environment and which impairs the use or enjoyment of the waters of the state, including the intermediate aquatic hosts for schistosomes that cause swimmers’ itch.
(f) "Aquatic vegetation" means both algae and higher aquatic plants.
(g) "Area of impact" means the area within a waterbody where target organisms may be adversely affected or destroyed.
(h) “Certificate of coverage” means written authorization from the department to implement a project under a general permit.
(i) "Chemical" means any product designed to control, aid in the control, eliminate, or restrict the growth of aquatic nuisances.
(j) "Commercial applicator" means a person who is required to be a registered or certified applicator under part 83 of 1994 PA 451, who uses or supervises the use of a restricted use pesticide, or holds himself or herself out to the public as being in the business of applying pesticides.
(k) "Department" means the Michigan department of environmental quality.
(l) "Director" means the director of the department.
(m) "Emergency notification procedure" means a department-approved procedure submitted annually by a commercial applicator, or state or local government, which provides a description of all available means of contact, such as home telephone number, business telephone number, mobile telephone number, or pager number.
(n) "EPA" means the United States environmental protection agency.
(o) "FIFRA" means the federal insecticide, fungicide and rodenticide act, as amended, being 7 U.S.C. §§136 to 136(y).
(p) "Fluridone" means 1-methyl-3-phenyl-5-[3-(trifluoromethyl)phenyl]-4(1*h*)-pyridinone.
(q) "General permit" means a permit for a category of activities that the department determines will not negatively impact human health and will have no more than minimal short-term adverse impacts on the natural resources and environment.
(r) "Higher aquatic plant" means any of a group of vascularized plants which have true stems, flowers, leaves, and roots, which live in water, and which belong to the class angiospermae.
(s) "Littoral zone" means the area of a waterbody from the water’s edge to the limit of the depth of light penetration where rooted aquatic vegetation typically grows.
(t) "Outlet" means any natural or artificially created watercourse or structure which allows passage of water out of a waterbody into other surface waters of the state, in an intermittent or continuous flow.
(u) "Person" means any of the following entities:
(i) An individual.
(ii) Sole proprietorship.
(iii) Partnership.
(iv) Corporation.
(v) Municipality.
(vi) This state.
(vii) An instrumentality or agency of this state.
(viii) The federal government.
(ix) An instrumentality or agency of the federal government.
(x) Another legal entity.
(v) "Pesticide" means a substance or mixture of substances intended for preventing, destroying, repelling, or mitigating aquatic nuisances.
(w) "Swimmers' itch" means the inflammation of a swimmer's skin resulting from an allergic reaction to the penetration of the skin by the immature stages of blood fluke parasites which live a part of their life cycle in certain aquatic snails.
(x) "Waters of the state" means groundwaters, lakes, ponds, rivers, streams, and wetlands and all other watercourses and waters within the jurisdiction of this state and also the great lakes bordering this state. For the purposes of these rules, “waters of the state” may also be referred to as a waterbody.
History: 1954 ACS 95, Eff. June 9, 1978; 1979 AC; 2003 MR 5, Eff. Mar. 13 2003.

R 323.3102 Activities requiring a permit or certificate of coverage.

Rule 2. (1) A permit or certificate of coverage shall be obtained from the department before any chemical treatment of waters of the state for the purpose of aquatic nuisance control, where the area of impact contains visible water at the time of chemical treatment. A permit or certificate of coverage shall also be obtained for chemical treatment of the Great Lakes and Lake St. Clair where the area of impact is exposed bottomland located below the ordinary high water mark.
(2) A person is authorized to chemically treat waters of the state without obtaining a permit or a certificate of coverage from the department if all of the following criteria are met:
(a) A waterbody does not have an outlet.
(b) There is no record of a state or federal endangered or threatened species, pursuant to part 365 of 1994 PA 451.
(c) A waterbody has a surface area of less than 10 acres.
(d) The bottomlands of a waterbody are owned by either of the following:
(i) A single person.
(ii) More than 1 person and written permission for the proposed chemical treatment is obtained from each person.
(3) A person conducting a chemical treatment authorized by subrule (2) of this rule shall maintain written permissions and records of treatment, including treatment date, chemicals applied and amounts, and a map indicating the area of impact, for 1 year from the date of each chemical application. The records shall be made available to the department upon request. Each chemical treatment shall be posted as specified in R 323.3106(d).
History: 1954 ACS 95, Eff. June 9, 1978; 1979 AC; 2003 MR 5, Eff. Mar. 13 2003.

R 323.3103 Registration of pesticides; use of certain chemicals prohibited.
Rule 3. (1) Pesticides used in waters of the state for aquatic nuisance control shall be registered with the EPA, pursuant to section 3 of FIFRA, and the Michigan department of agriculture, pursuant to section 8307, 1994 PA 451, MCL 324.8307, for the nuisance control activity for which it is proposed.
(2) The department may conduct evaluations of the impacts and effectiveness for any chemicals that are proposed for use in waters of the state. This may include the issuance of permits for field assessments of the chemicals.
(3) The director, in consultation with the director of the Michigan department of agriculture, may prohibit or suspend the use of a chemical if, based on substantial scientific evidence, use of a chemical is shown to cause unacceptable negative impacts to human health or the environment. The department shall not issue permits authorizing the use of such chemicals. In addition, a person shall cease the use of such chemicals upon notification by the department.
History: 1954 ACS 95, Eff. June 9, 1978; 1979 AC; 2003 MR 5, Eff. Mar. 13 2003.

R 323.3104 Application for permit or certificate of coverage.
Rule 4. (1) An applicant shall file an application for a permit or a certificate of coverage with the department on a form provided by the department. An application shall include all of the following information:
(a) The active ingredient or chemical trade name, and proposed application rate for each chemical proposed for use.
(b) A map or maps, to scale, of the waterbody which clearly delineates the proposed area or areas of impact for each chemical type.
(c) The name, address or lot number, and telephone number for all bottomland owners whose property is in the proposed area of impact, except as follows:
(i) If the proposed area of impact is to involve the property of 5 or more bottomland owners, contact information is required for 5 persons who will know the date of treatment, the chemicals used, and the area or areas of impact for each chemical treatment.
(ii) If an applicant has an emergency notification procedure, contact information is required for 1 person who will know the date of treatment, the chemicals used, and the area or areas of impact for each chemical treatment.
(iii) If an applicant has contracted with a person to provide chemical treatment of aquatic nuisances, who has an emergency notification procedure, the applicant shall identify the person and provide a copy of the contract or authorization form.
(d) Any additional information the department deems pertinent to reaching a decision.
(2) An applicant shall provide a lake management plan as part of an application for permit, if a whole lake treatment is proposed.
(3) The department may require an applicant to provide a lake management plan as part of an application for permit based on the type of proposed chemical treatment (for example, treatments evaluating the effectiveness of a pesticide) or on the significance of proposed impacts on natural resources (for example, treatments where threatened or endangered species or habitats are present, treatment of a waterbody where removal of a large portion of native aquatic vegetation is proposed), or on the extent of bottomlands owned by public institutions. If a lake management plan is required, then the department shall notify potential applicants at least 1 year in advance of the requirement. At a minimum, notification shall be posted on the department internet web site, and shall be published in pertinent department publications.

(4) A lake management plan shall be provided on department forms and shall include, at a minimum, all of the following:
(a) All of the following physical characteristics of the waterbody:
(i) Location.
(ii) Lake size.
(iii) Maximum depth.
(iv) Mean depth.
(v) Size of littoral zone.
(vi) Shoreline length.
(vii) Retention time.
(viii) Location map.
(ix) Bathymetric map, including all of the following:
(A) Tributaries.
(B) Outlets.
(C) Public/private access sites.
(D) Public land.
(E) Critical fish spawning areas.
(F) Wetlands.
(g) Special habitats.
(h) Parks.
(i) Water control structures.
(b) A description of the water quality, including data for water quality indicators, such as dissolved oxygen, temperature, total alkalinity, and transparency (secchi disk).
(c) All of the following biological characteristics of the waterbody:
(i) Aquatic vegetation map(s) and data analysis.
(ii) Total higher aquatic plant surface coverage.
(iii) A description of the fish, wildlife, and plant communities, including identification of any special concern, threatened, or endangered species.
(d) Land use activities including a description of the land use, and a land use map.
(e) History of waterbody management.
(f) Documentation of opportunities for involvement in plan development by stakeholders and agencies responsible for managing public trust resources, including a description of all input obtained.
(g) Vegetation management plan that includes a description of the aquatic nuisance problem, management goals, management goal maps, management options, proposed actions necessary to attain the management goals, management timeline, and monitoring and evaluation processes.
(5) The department shall either issue or deny a certificate of coverage within 15 working days after receipt of a complete application. If denied, the department shall notify the applicant, in writing, of the reasons for denial.
(6) The department shall issue a permit, grant the permit in part, or deny the permit within 30 working days after receipt of a complete application. If denied or granted in part, the department shall notify the applicant, in writing, of the reasons for denial.
(7) An applicant shall obtain authorization to chemically treat the proposed area or areas of impact by obtaining written permission from each person who owns bottomlands in the area or areas of impact. The applicant shall maintain the written permission for 1 year from the expiration date of the permit, and shall make the records available to the department upon request. Written permission from each bottomland owner is not required if the applicant is providing, or has contracted to provide, chemical treatment for either of the following:
(a) A lake board established under part 309 of 1994 PA 451.
(b) A state or local government acting under authority of state law to conduct lake improvement projects or to control aquatic vegetation.
History: 1954 ACS 95, Eff. June 9, 1978; 1979 AC; 2003 MR 5, Eff. Mar. 13 2003.

R 323.3105 Permits.
Rule 5. (1) A permit shall, at a minimum, include all of the following information:
(a) The active ingredient or the trade name of each chemical to be applied.
(b) The application rate of each chemical.
(c) The maximum amount of each chemical to be applied per treatment.
(d) Minimum length of time between treatments for each chemical.
(e) A map or maps that clearly delineate the approved area or areas of impact.

(2) The department may impose additional conditions on a permit to protect the natural resources or the public health; to prevent economic loss, recreational damage, and unacceptable negative impacts to nontarget organisms; and to prevent a failure to provide control of the aquatic nuisance.
(3) The department may issue general permits.
History: 1954 ACS 95, Eff. June 9, 1978; 1979 AC; 2003 MR 5, Eff. Mar. 13 2003.

R 323.3106 Permit conditions.
Rule 6. (1) As a condition of a permit, the department may require the permittee to do any of the following:
(a) Notify the department not less than 2 working days in advance of chemical treatment.
(b) Proceed with chemical treatment only if a department representative is present.
(c) Allow the department or its representative to collect a sample of the chemical or chemicals used before or during any chemical treatment.
(d) Post the area or areas of impact before chemical treatment. All of the following posting requirements apply:
(i) Signs shall be of a brilliant color and made of durable material. Minimum sign dimensions shall be 14 inches by 11 inches and shall be attached to a supporting device with the bottom of the sign extending not less than 12 inches above the ground surface.
(ii) Posting signs shall be placed in the following locations unless the department determines that the locations are impractical or infeasible based upon a written request from an applicant which includes an explanation of the necessity for alternative posting locations and a description of the proposed posting locations:
(a) For an area or areas of impact that total less than 2 acres, signs shall be placed along the shoreline of the areas of impact not more than 100 feet apart. Riparian lands adjacent to the area shall also be posted, if permitted by the riparian owner.
(b) For an area of impact that is greater than or equal to 2 acres, posting signs shall be posted as in paragraph (ii)(A) of this subdivision. In addition, all access sites, boat launching areas, and private and public parks located on the waterbody shall be posted conspicuously, such as at the entrances, boat ramps, and bulletin boards, if permitted by their managers or owners. If the access sites, launching areas, and parks are not to be treated or are not adjacent to the areas of impact, then the signs shall clearly indicate the location of the areas of impact and shall contain the other information specified in paragraph (iii) of this subdivision.
(iii) At a minimum, posting signs shall include all of the following information:
(a) The permit number.
(b) The name of the waterbody.
(c) The date of treatment.
(d) The name, address, and telephone number of the person conducting the treatment.
(e) The name of the chemical or chemicals used and the restrictions on the use of treated water pursuant to the permit.
(f) The expiration date of water use restrictions for each chemical used during treatment.
(g) The phrase "do not remove posting signs or maps until all water use restrictions have expired."
(e) Publish a notice in a local newspaper or make an announcement on a local radio station regarding the chemical treatment. The notice or announcement shall include all of the following information:
(i) The permit number.
(ii) The name of the waterbody.
(iii) A list of the chemicals to be used with corresponding water use restrictions.
(iv) A description of the areas of impact.
(v) The proposed treatment dates.
(f) Apply chemicals so that swimming restrictions and fish-consumption restrictions are not imposed on any Saturday, Sunday, or state-declared holiday.
(g) Take special precautions to avoid or minimize potential impacts to human health, the environment, and nontarget organisms.
(h) Notify, in writing, an owner of any waterfront property within 100 feet of the area of impact, not less than 7 days, and not more than 45 days, before the initial chemical treatment. Written notification shall include all of the following information:
(i) Name, address, and telephone number of the permittee.
(ii) A list of chemicals proposed for use with corresponding water use restrictions.
(iii) All approximate treatment dates per chemical.
If the owner is not the occupant of the waterfront property or the dwelling located on the property, then the owner is responsible for notifying the occupant.
(i) Complete and return the treatment report form provided by the department for each treatment season.
(j) Perform lake water residue analysis to verify the chemical concentrations in the waterbody according to a frequency, timing, and methodology approved by the department.

(k) Perform aquatic vegetation surveys according to a frequency, timing, and methodology that has been approved by the department prior to submittal of a permit application.
(l) Use chemical control methods for nuisance aquatic vegetation that are consistent with the approved vegetation management plan submitted separately or as part of a lake management plan. The department may approve modifications to the vegetation management plan upon receipt of a written request from the permittee that includes supporting documentation.
(m) Perform pretreatment monitoring of the target plant population according to a frequency, timing, and methodology that has been approved by the department prior to submittal of a permit application.
History: 1954 ACS 95, Eff. June 9, 1978; 1979 AC; 2003 MR 5, Eff. Mar. 13 2003.

R 323.3107 Fluridone use.
Rule 7. (1) The department may issue permits for the use of a liquid formulation of fluridone as a spring treatment to control Eurasian watermilfoil, as follows:
(a) A permit may be issued if the department determines that both of the following provisions apply:
(i) There is widespread distribution of Eurasian watermilfoil in the lake.
(ii) The abundance of Eurasian watermilfoil causes it to be an aquatic nuisance.
(b) An application shall include information necessary for the department to make the determination under subdivision (a) of this subrule, including an aquatic vegetation survey performed in August or September of the year before the proposed fluridone application and corresponding survey data analysis. The aquatic vegetation survey and data analysis shall be performed according to methods that have been approved by the department before submittal of a permit application.
(c) A permit or permit amendment shall not authorize a lake water fluridone concentration to be more than 6 parts per billion.
(d) The department may amend a permit to authorize an additional treatment 14 to 21 days following initial treatment, if the average fluridone concentration of all surface samples taken 13 to 15 days after treatment is less than 5 parts per billion.
(2) The department may issue permits for the evaluation of uses of fluridone other than as a spring treatment to control Eurasian watermilfoil.
(3) An applicant proposing chemical treatment of a waterbody using fluridone shall provide a lake management plan as described in R 323.3104(2).
(4) As a condition of all permits authorizing the use of fluridone, the department shall require the permittee to perform the activities listed in R 323.3106(j), (k), and (l).
(5) The department shall not issue a permit for the use of fluridone in the same waterbody more than once in any 3-year period, unless either of the following provisions applies:
(a) The department determines, in the year of treatment, that a fluridone treatment failed to control Eurasian watermilfoil.
(b) A use of fluridone approved by the department pursuant to subrule (2) of this rule explicitly includes the use of fluridone in more than 1 year during a 3-year period.
History: 1954 ACS 95, Eff. June 9, 1978; 1979 AC; 2003 MR 5, Eff. Mar. 13 2003.

R 323.3108 Denial of a permit or a certificate of coverage.
Rule 8. (1) The department shall deny a permit application, or a part of a permit application, in any of the following circumstances:
(a) The proposed use of a pesticide is inconsistent with its label pursuant to FIFRA.
(b) The proposed use of a pesticide is not registered by the Michigan department of agriculture pursuant to part 83 of 1994 PA 451 and the EPA pursuant to FIFRA.
(c) The proposed use of a chemical, though in accordance with the label and otherwise in compliance with these rules or in combination with other aquatic management activities, is likely to result in economic loss, recreational damage, a public health hazard, unacceptable negative impacts to natural resources, or failure to provide control of the aquatic nuisance, as determined by the department.
(d) An application for chemical treatment of higher aquatic plants is postmarked after August 15 in the year for which treatment is proposed.
(2) The department shall deny a certificate of coverage if the proposed project does not meet the requirements for the general permit under which the application is made.
(3) The department shall deny a permit application or an application for a certificate of coverage if an applicant has committed 2 or more violations of other permits previously issued under the act, conditions of a permit, or these rules within 1 calendar year. For purposes of this subrule, “violation” means conviction in a court of law, or revocation of a permit or certificate of coverage by the department, pursuant to R 323.3109(b) and (c).
History: 1954 ACS 95, Eff. June 9, 1978; 1979 AC; 2003 MR 5, Eff. Mar. 13 2003.

R 323.3109 Revocation of permit or certificate of coverage.

Rule 9. (1) The department may revoke a permit or certificate of coverage for cause, including any of the following:
(a) The department determines, through information not available to the department at the time of permit issuance, that the use of a chemical, although otherwise in accordance with the label and these rules or in combination with other aquatic management activities, is likely to result in economic loss, recreational damage, a public health hazard, unacceptable negative impacts to natural resources, or failure to provide control of the aquatic nuisance, as determined by the department.
(b) Failure to comply with any condition of a permit, the act, or these rules, as determined by the department.
(c) Obtaining a permit or certificate of coverage by misrepresentation or failure to fully disclose relevant facts.
History: 1954 ACS 95, Eff. June 9, 1978; 1979 AC; 2003 MR 5, Eff. Mar. 13 2003.

R 323.3110 Permit amendments.
Rule 10. (1) The department may make minor revisions, based on minimizing the impacts to the natural resources, public health, and safety, to a permit before permit expiration, if the proposed revisions do not involve a change in the scope of the project, and upon receipt of a written request from the permittee that includes all of the following information:
(a) The proposed changes to the permit.
(b) An explanation of the necessity for the proposed changes.
(c) Maps that clearly delineate any proposed changes to the area or areas of impact.
(d) Additional information that would help the department reach a decision on a permit amendment.
History: 1954 ACS 95, Eff. June 9, 1978; 1979 AC; 2003 MR 5, Eff. Mar. 13 2003.

DEPARTMENT OF ENVIRONMENTAL QUALITY

OFFICE OF ADMINISTRATIVE HEARINGS

CONTESTED CASE AND DECLARATORY RULING PROCEDURES

PART l. GENERAL PROVISIONS

R 324.1 Definitions.
Rule 1. (1) As used in these rules:
(a) “Act” means 1969 PA 306, MCL 24.201 et. seq.
(b) “Administrative law judge” means presiding officer as referred to in the act and the person designated by the director to conduct hearings under these rules.
(c) “Department” means the department of environmental quality.
(d) “Director” means the director of the department.
(e) “Final decision maker” means the director or any other person to whom the director has delegated final decision making authority in contested cases.
(f) “Office” means the office of administrative hearings within the department.
(g) “Petition” means a petition for a contested case hearing.
(h) “Petitioner” means a person who files a petition for a contested case hearing.
(i) “Respondent” means a person against whom a contested case proceeding is commenced.
(j) “Tribunal” means the adjudicative body within the department that conducts contested case hearings.
(2) Words defined in the act have the same meanings when used in these rules.
History: 2003 MR 2, Eff. Jan. 29, 2003.

R 324.2 Construction of rules.
Rule 2. These procedural rules shall be construed to secure a fair, efficient, and impartial determination of the issues presented in contested cases consistent with due process and safeguarding the rights of the parties.
History: 2003 MR 2, Eff. Jan. 29, 2003.

R 324.3 Scope of rules; statutory procedures; absence of procedures.
Rule 3. (1) These rules govern all contested case proceedings before the department and requests for declaratory rulings.
(2) If a contested case is brought pursuant to a statute that provides governing procedures, the portions of these rules that are inconsistent with the statutory provisions do not apply, but any portion of these rules that is consistent with the statutory provisions apply in addition to those procedures. However, these rules do not apply to proceedings under Parts 615 and 617 of 1994 PA 451, MCL 324.61501, et seq. and 324.61701, et. seq.
(3) If a rule does not address an issue of procedure, then chapter 4 of the act shall govern.

History: 2003 MR 2, Eff. Jan. 29, 2003.

PART 2. COMMENCEMENT OF CONTESTED CASE PROCEEDING

R 324.21 Petition for contested case; required information; submission to the office; acknowledgment of receipt.
Rule 21. (1) A written petition for a contested case shall be on the form provided by the department or other document and shall include all of the following information:
(a) Facts or conduct that warrant a contested case.
(b) The identity of the persons involved and their relationship to the subject matter.
(c) Specific sections of applicable statutes and rules, if known.
(d) The specific remedies sought.
(e) A copy of the department's decision being challenged**,** if made in writing.
(2) The petition shall be signed by the person requesting a contested case or the person's authorized representative. A petition shall be mailed or delivered to the department. The date of receipt by the department shall be the date a petition is filed. Unless otherwise stated in a statute, a petition shall be filed within 60 days from the date of the department's decision to be considered timely. A person shall submit a petition on a form provided by the department or a document that complies with the requirements with subrule (1) of this rule.
History: 2003 MR 2, Eff. Jan. 29, 2003.

R 324.22 Investigation of petition; determination of tribunal; failure to provide opportunity to show compliance; notice to petitioner.
Rule 22. (1) Within a reasonable time after receipt of a petition for a contested case, the office, in conformity with any applicable statute or that rule, shall take 1 of the following actions:
(a) Request that the petitioner submit an amended petition providing a more detailed and definite statement of issues.
(b) Place the petition on the docket of pending cases and acknowledge, in writing, its receipt and that a case is opened. The acknowledgement shall be sent to all parties, and the permit holder if applicable.
(c) Take any other appropriate action within its authority, including, but not limited to, the issuance of a sua sponte order of dismissal.
(2) If a petition raises questions relevant to a proper disposition of the petition, then the department may be requested to respond to the petition in writing. Following any action under this subrule, 1 of the actions under subrule (1) of this rule shall be taken.
(3) The petitioner shall be notified of any decision made under subrules (l) and (2) and shall be provided with a written explanation of the reasons for the decision.
(4) If it is determined the department has failed to provide the petitioner an opportunity to show compliance as required by §92 of the act, the matter shall be returned to the department for issuing a notice for an opportunity to show compliance or such other action as may be appropriate.
History: 2003 MR 2, Eff. Jan. 29, 2003.

R 324.23 Contested case docket; docket numbers; notice to parties of docketing a case; commencement of contested case proceeding; no progress docket.
Rule 23. (1) The office shall maintain a docket of all pending petitions.
(2) A case docket number shall be assigned to all petitions. The number shall correspond, if possible, to the permit, application, or document number used by the department in the matter that is the subject of the petition. Parties shall include the docket number and petitioner's name on the first page of all pleadings or correspondence filed in a case.
(3) The office shall provide a copy of the petition to the respondent, and inform all parties of the docket number at the time of acknowledgment. The acknowledgment shall be considered notice of the commencement of the contested case proceeding.
(4) A no progress docket shall be maintained by the office. Failure of a petitioner to respond in a timely manner to any directive of the office may result in placing the case on the no progress docket.
(5) A party whose case is placed on the no progress docket shall be given notice and time to show cause why the case should not be dismissed for undue delay. A party shall submit the requisite documents, or otherwise respond to unanswered requests, as part of that party's response to the notice. If a party fails to respond to the notice within 21 days of its date, the case shall be dismissed with prejudice.
History: 2003 MR 2, Eff. Jan. 29, 2003.

R 324.24 Service of notice by office; service by party; service on attorney; manner of service; proof of service.
Rule 24. (1) The office shall serve documents by first-class mail, unless otherwise required by statute. A copy of all

documents shall be included in the case file. No proof of service shall be required of the office.
(2) Service by a party shall be made in person or by mail as specified in subrules (3) and (4) of this rule. A party shall serve all documents and pleadings filed in a contested case on all other parties. Service of documents shall be made on a party's attorney who has filed an appearance, if any, and shall be effective as service on the party.
(3) Personal service may be used if service by mail is required or permitted, unless otherwise required by statute. Personal service shall be made on a person or party by leaving orders, notices, and other documents with the person or party or with a party's attorney of record.
(4) Service by mail shall be accomplished by complying with both of the following requirements, except as otherwise required by statute:
(a) Enclosing a copy of the document or pleading in a sealed envelope with postage fully prepaid and addressed to the person to be served at that person's last known address. The envelope shall list the return address of the sender.
(b) Depositing the envelope and its contents in the mail.
(5) A person or party who has served a document or pleading in a contested case shall file with the office a proof of service at the time of filing the original pleading or document with the office. Proof of service shall be made as follows:
(a) If service is made by mail, proof of service shall be made by filing a certification of service that shows compliance with subrule (4) of this rule by specifying all of the following:
(i) The method of service.
(ii) The identity of the server.
(iii) The date and place of mailing.
(iv) The address where the materials were mailed.
(b) If the service is made by personal service, proof of service shall be made by filing an affidavit of service certifying all of the following:
(i) The method of service.
(ii) The identity of the server.
(iii) The person served.
(iv) The date and place of service.
History: 2003 MR 2, Eff. Jan. 29, 2003.

PART 3. FINAL DECISION MAKER AND ADMINISTRATIVE LAW JUDGES

R 324.31 Final decision maker and administrative law judge; disqualification; motions; ruling on motions; review by office; oral motions; review by office.
Rule 31. (1) The final decision maker or an administrative law judge shall withdraw from a case if that person deems himself or herself personally biased, prejudiced, or otherwise disqualified to preside. Withdrawal shall be noted on the record and shall disclose the nature of the personal bias, prejudice, or disqualification. The director shall designate a replacement.
(2) A party may file a written motion to disqualify the final decision maker or an administrative law judge. A motion to disqualify shall be filed before the commencement of hearing or as soon as practicable after discovery of the alleged grounds for disqualification. A motion to disqualify shall be supported by an affidavit conforming to the standards of section 79 of the act and the Michigan court rules. An allegation that the administrative law judge is an employee of the department does not constitute a sufficient basis for disqualification.
(3) The administrative law judge presiding over the case shall rule on the motion to disqualify.
History: 2003 MR 2, Eff. Jan. 29, 2003.

R 324.32 Administrative law judge; powers.
Rule 32. An administrative law judge may exercise the powers specified in section 80 of the act and any power described in these rules or delegated by the director pertaining to presiding officers.
History: 2003 MR 2, Eff. Jan. 29, 2003.

R 324.33 Ex parte contact with final decision maker or administrative law judge.
Rule 33. Direct or indirect contact with the final decision maker or the administrative law judge who presides over the case by a party, a party’s attorney, or any other person on behalf of a party concerning the merits of a case pending review is ex parte communication. Ex parte communication is prohibited and will subject a party or counsel to appropriate sanctions under R 324.59(2) or disciplinary action.
History: 2003 MR 2, Eff. Jan. 29, 2003.

PART 4. PREHEARING CONFERENCES

R 324.41 Prehearing conference; purpose.
Rule 41. (1) The administrative law judge may direct the parties to appear at the time and date established by the office for 1 or more prehearing conferences in order to do any of the following:
(a) Simplify and clarify factual and legal issues.
(b) Consider amendments to pleadings.
(c) Obtain admissions and stipulations of fact or authenticate evidence.
(d) Expedite the discovery and presentation of evidence.
(e) Produce all proposed exhibits in the possession of a party.
(f) Identify witnesses and generally describe the issues on which they may testify.
(g) Set a time for the exchange of any written testimony.
(h) Estimate the time required for the hearing.
(i) Discuss settlement or other disposition of the case.
(j) Set time limits for discovery, motions, and other matters.
(k) Determine the parties to the case.
(l) Set the time limit for the exchange of proposed exhibits and witness lists.
(m) Set the date, time, and place for the hearing.
(n) Consider other matters that may aid in the disposition of the proceedings.
(2) The administrative law judge may conduct a prehearing conference by a telephone conference call.
History: 2003 MR 2, Eff. Jan. 29, 2003.

R 324.42 Prehearing conference; failure to appear; binding nature of conference; memorandum on witnesses and exhibits.
Rule 42. (1) If a party fails to appear for a prehearing conference after proper service of notice, and if no adjournment is granted, the administrative law judge may proceed with the conference. A party who fails to attend the conference without good cause shall be subject to any procedural agreements reached and any procedural order or procedural ruling made with respect to matters addressed at the conference, and the case may be placed on the no-progress docket.
(2) The administrative law judge may order each party to exchange a list of witnesses the party intends to call and offer testimony at the hearing. The witness list shall identify the witness and contain a brief recitation of each witness's anticipated testimony. The curriculum vitae of a witness, who will be offered as an expert, shall be provided with the witness list. A witness not identified by the date established shall not be allowed to testify at the hearing without showing good cause. A witness not identified as required may be allowed to testify for the purpose of rebutting the exhibits or testimony of another party.
(3) The administrative law judge may order each party to exchange, or if appropriate identify, all proposed exhibits intended to be introduced during the party's direct case. An exhibit not exchanged or identified by the date established may not be entered on the record unless good cause is shown. The parties may stipulate to a schedule for the exchange of such materials, subject to the approval of the administrative law judge.
History: 2003 MR 2, Eff. Jan. 29, 2003.

R 324.43 Prehearing conference; record of rulings and orders; summary; copies and corrections.
Rule 43. After a prehearing conference, the administrative law judge shall issue a conference summary setting forth the date, time, and place of the hearing. The conference summary shall also describe the agreements of the parties regarding the date for the exchange of witness lists and proposed exhibits, dates for filing motions and responses, discovery, and any other attendant matters. The conference summary shall also set forth the factual stipulations of the parties. All of the terms and conditions in the conference summary shall become binding on the parties absent the filing of a written objection within the time prescribed in the conference summary.
History: 2003 MR 2, Eff. Jan. 29, 2003.

PART 5. PREHEARING MATTERS

R 324.51 Appearance by attorney.
Rule 51. An attorney who represents a party in a contested case shall promptly file an appearance with the office.
History: 2003 MR 2, Eff. Jan. 29, 2003.

R 324.52 Pleadings and other documents; form; statements of facts; answer; certification; manner of filing; time limits.

Rule 52. (1) Pleadings and other documents, including all of the following, may be permitted by the administrative law judge:
(a) An administrative complaint.
(b) A petition for contested case proceeding.
(c) Answers.
(d) Memoranda.
(e) Motions, briefs, and affidavits in support of, and responses to, a motion.
(2) Pleadings and other documents shall include the title and docket number of the case and be submitted on 8½ by 11-inch paper. The Michigan court rules may be used as to all matters of form.
(3) The paragraphs of an answer or response shall be numbered to correspond to the numbered paragraphs, if any, of the pleading to which they respond. If a pleading does not contain numbered paragraphs, the answer or response shall address the issues in the order presented.
(4) The original of each petition, pleading, or other documents shall be signed by the submitting party or by the party's authorized representative. The signature of an attorney constitutes a certification by the attorney that he or she has read the document; that to the best of the attorney's knowledge, information, and belief it is well grounded in fact and supported by law; and that it is not interposed for unwarranted delay, harassment, or any other improper purpose.
(5) Pleadings and other documents shall be filed by sending or delivering them to the office at its Lansing address, unless otherwise directed. The date of receipt or delivery at the office shall be used to determine whether a pleading or other document has been filed in a timely manner, unless the administrative law judge orders otherwise.
(6) If a pleading or other document is not filed in accordance with applicable time limits, then a party may move that it be stricken from the record. The motion shall be granted if the party making the late filing does not show good cause and the late filing will not prejudice the moving party.
History: 2003 MR 2, Eff. Jan. 29, 2003.

R 324.53 Facsimile transmission of documents.
Rule 53. The office permits the use of facsimile communication equipment for the filing of documents. The following provisions govern the use of facsimile equipment for the filing of documents:
(a) All filings shall be on 8½ by 11-inch paper and consist of not more than 20 pages at any one time.
(b) A cover sheet that includes all of the following information shall accompany each transmission:
(i) Case name.
(ii) Case number.
(iii) Document title.
(iv) Name.
(v) Telephone number, and facsimile number of the sender.
(c) Documents received in the office after 5 p.m. eastern time are considered filed on the following business day.
(d) The original document shall be sent to the office by mail contemporaneous with the facsimile filing. Upon receipt of the original document, the office shall retain only the cover page of the facsimile filing in its file in order to verify the date of filing.
(e) For purposes of R 324.52(4), a signature includes a signature transmitted by facsimile communication equipment.
History: 2003 MR 2, Eff. Jan. 29, 2003.

R 324.54 Electronic filing of pleadings and documents.
Rule 54. The office may permit the filing and service of pleadings and documents by electronic mail in circumstances that further the purpose of R 324.2. The original document shall be sent to the office by mail contemporaneous with the electronic filing. R 324.53 shall be a guide in determining the filing date and retention of documents filed electronically.
History: 2003 MR 2, Eff. Jan. 29, 2003.

R 324.55 Summary disposition.
Rule 55. A party may move for full or partial summary disposition on any of the following grounds:
(a) The department lacks jurisdiction over the person or subject matter.
(b) The opposing party has failed to state a claim upon which relief can be granted.
(c) No genuine issue exists as to any material fact, and the moving party is, therefore, entitled to a favorable decision as a matter of law.
(d) The party asserting the claim lacks standing.
History: 2003 MR 2, Eff. Jan. 29, 2003.

R 324.56 Application for order in pending action.

Rule 56. An application for an order shall be made by motion. Unless made during a hearing, the motion shall be in compliance with all of the following provisions:
(a) Be in writing.
(b) State with particularity the grounds and authority upon which it is based.
(c) State the relief or order sought.
(d) Be signed by the party or attorney.
History: 2003 MR 2, Eff. Jan. 29, 2003.

R 324.57 Response to motion; oral argument.
Rule 57. A party may file a written response to a written motion within 14 days or within a time specified by the administrative law judge. A party may request oral argument and the request may be granted at the discretion of the administrative law judge. The administrative law judge may order oral argument if he or she believes such argument will aid in the decision making process.
History: 2003 MR 2, Eff. Jan. 29, 2003.

R 325.58 Motion to correct or strike pleadings; failure to obey if granted; time for submission if denied; striking material.
Rule 58. (1) An opposing party may move for a more definite statement of the issues on the ground that a pleading is so vague or ambiguous that it cannot be understood or answered. The motion shall identify the defects or deficiencies.
(2) An order for a more definite statement shall be obeyed within 14 days after service of the order. If not obeyed, the administrative law judge may strike the pleading to which the motion was directed or enter any other order that is just.
(3) If a motion for a more definite statement is denied, the moving party shall file the responsive pleading that was delayed by the motion within 14 days after the date of the order.
(4) The administrative law judge, on motion by a party or on his or her own motion, may order either or both of the following stricken from any pleading:
(a) Redundant, irrelevant, immaterial, impertinent, scandalous, privileged, or indecent matter.
(b) All or any part of a pleading not drawn in conformity with these rules.
History: 2003 MR 2, Eff. Jan. 29, 2003.

R 324.59 Depositions; discovery; failure to comply; order directing compliance; effect of refusal to obey order.
Rule 59. (1) The taking and use of depositions and other discovery shall be allowed only upon stipulation of the parties or by leave of the administrative law judge. A motion for discovery shall not be filed unless the discovery sought has been previously requested of a party and refused. The motion shall describe the nature of the discovery sought and the purpose of the discovery. A party against whom the discovery request is directed shall have 14 days to respond to the motion or within a time frame specified by the administrative law judge. If discovery is granted, it shall proceed in the same manner as in the circuit courts. A deposition or other discovery taken pursuant to this subrule, may be offered as evidence at the discretion of the administrative law judge.
(2) If a party refuses to obey an order issued under subrule (1) of this rule, then the administrative law judge, on the motion of a party or sua sponte, may enter such orders addressing the refusal as are just, including, but are not limited to, any of the following:
(a) Deem that the facts sought under the original order are established for the purposes of the proceeding in accordance with the claim of the party obtaining the order.
(b) Prohibit the disobedient party from admitting new evidence supporting or opposing designated claims or defenses.
(c) Ordering that pleadings or parts of pleadings are stricken, staying further proceedings until the order is obeyed, dismissing the proceeding or a part of the proceeding, or defaulting the disobedient party.
History: 2003 MR 2, Eff. Jan. 29, 2003.

R 324.59a Adjournment of hearings; written motion; time for serving; exceptions.
Rule 59a. (1) A hearing may be adjourned only by order of the administrative law judge on motion by a party or sua sponte. The administrative law judge may order an adjournment on stipulation of the parties at the discretion of the administrative law judge, if it is determined an adjournment is not in conflict with R 324.2.
(2) Before a hearing commences, a motion for adjournment shall be made in writing and state with particularity the reasons why an adjournment is necessary. A written motion served less than 5 days before the date set for hearing shall not be considered unless the administrative law judge finds that an exception should be made because of any of the following:
(a) The motion could not be served within the time limit for reasons not within the control of the party making the motion.
(b) The interests of justice require the exception.

(c) The parties have reached a settlement agreement and the specific date as to when the settlement will be finalized is provided in the motion.
History: 2003 MR 2, Eff. Jan. 29, 2003.

R 324.59b Motion for extension of time.
Rule 59b. Requests for extensions of any time limit established in these rules shall be made by written motion and filed with the office before the expiration of the period originally prescribed or previously extended, except as otherwise provided by law, or by stipulation of the parties. A motion under this rule shall be granted only for good cause or on the written stipulation of the parties, and only if the order for extention would not be in conflict with R 324.2.
History: 2003 MR 2, Eff. Jan. 29, 2003.

R 324.59c Accompaniment of written motion by proposed order.
Rule 59c. A written motion may be accompanied by a proposed order.
History: 2003 MR 2, Eff. Jan. 29, 2003.

R 324.59d Application for intervention; filing; service; answers; oral argument; rulings.
Rule 59d. (1) A person who has legal standing and who seeks to intervene as a party in a contested case shall file an application to intervene with the office setting forth the legal authority and facts supporting intervention. A person who files an application shall serve copies on all parties known to the person at the time of application and provide proof of service at the time of filing. The office shall advise an applicant for intervention of the names and addresses of parties not served by the applicant, who shall then serve those parties and file a proof of service consistent with R 324.24.
(2) An application under subrule (1) of this rule shall not be granted until all parties have had an opportunity to answer the application in writing, unless the applicant is the permit holder. An answer shall be filed within 14 days after the date of service of the application or within the period of time established by an order of the administrative law judge.
(3) The administrative law judge shall consider whether intervention would be in conflict with R 324.2 or prejudice the rights of the existing parties. To avoid prejudice, intervention by a person may be denied or limited.
(4) The applicable statute and rules shall govern the issue of standing in a contested case hearing and these rules shall not be construed to either expand or restrict the legal standing of any person to intervene as a party in a contested case.
History: 2003 MR 2, Eff. Jan. 29, 2003.

R 324.59e Joint hearing; consolidation of proceedings; representative actions; notice of intent to issue order; filing of objections.
Rule 59e. (1) When contested cases involving a substantial and controlling common question of fact or law or where multiple petitions have been filed regarding the same project or application are pending on the docket, the office may, on motion of a party or sua sponte, take any of the following actions provided that the interests of the parties are not prejudiced by such actions:
(a) Order a joint hearing on any or all of the matters at issue.
(b) Order the proceedings consolidated.
(c) Make other orders concerning the proceedings to avoid unnecessary costs or delays.
(d) Appoint a representative petitioner to fairly and adequately assert and protect the interests of all petitioners.
(2) Before issuing an order sua sponte under subrule (1), the office shall serve on the parties a notice of intent to issue the order. The parties shall have 14 days from service of the notice to file objections.
History: 2003 MR 2, Eff. Jan. 29, 2003.

PART 6. HEARINGS

R 324.61 Hearing; location.
Rule 61. A hearing shall be conducted in Lansing unless the administrative law judge orders a change of situs.
History: 2003 MR 2, Eff. Jan. 29, 2003.

R 324.62 Hearing; record.
Rule 62. A hearing shall be conducted on the record. A certified court reporter or court recorder shall take a transcript of testimony. The record shall consist all of the following:
(a) The sworn testimony.
(b) Stipulations.
(c) Exhibits admitted into evidence.

(d) Offers of proof.
(e) Pleadings and motions filed.
(f) The rulings made.
The official record, excluding transcripts, shall be made available to the parties upon request. A request for a transcript shall be made to the court reporter and the cost shall be borne by the party making the request.
History: 2003 MR 2, Eff. Jan. 29, 2003.

R 324.63 Hearing; opening statements; closing arguments.
Rule 63. A party may make, reserve, or waive an opening statement. A party may make a closing argument. The administrative law judge may order closing arguments to be submitted in writing and may require written proposed findings of fact and conclusions of law.
History: 2003 MR 2, Eff. Jan. 29, 2003.

R 324.64 Hearings; burden of proof; order of presentation of evidence; regulation of order of presentation; cross-examination.
Rule 64. (1) The party filing an administrative complaint or petition for a contested case hearing, a motion for summary disposition, or other motion as allowed by these rules, has the burden of proof and of moving forward unless otherwise required by law.
(2) All other parties shall present the evidence in an order determined by the administrative law judge. The administrative law judge may allow rebuttal testimony and may permit further testimony as deemed appropriate.
(3) The administrative law judge shall regulate the order of the hearing to promote the fair and efficient determination of the issues presented.
(4) Parties are entitled to cross-examine witnesses.
(5) Parties are entitled to offer evidence as to the facts at issue. Issues of law and policy are matters for argument and the administrative law judge may require they be addressed in writing.
(6) Admissibility of evidence shall be governed by section 75 of the act.
History: 2003 MR 2, Eff. Jan. 29, 2003.

R 324.65 Witnesses; oath or affirmation; examination; written testimony; motion to strike testimony.
Rule 65. (1) Testimony of witnesses shall be taken only after an oath or affirmation is administered. A witness shall be examined orally.
(2) The administrative law judge may permit testimony to be submitted in written form or in the narrative. Testimony submitted in written form shall be filed with the office and served upon the parties not less than 14 days before a hearing scheduled in the matter unless otherwise ordered by the administrative law judge. A motion to strike written testimony shall be filed not less than 5 days in advance of the hearing unless otherwise permitted by the administrative law judge. A party submitting testimony in written form shall make the witness available for cross-examination.
(3) The administrative law judge shall issue subpoenas if authorized by statute pursuant to section 73 of the act.
History: 2003 MR 2, Eff. Jan. 29, 2003.

PART 7. DECISION PROCESS

R 324.71 Proposal for decision; replacement of administrative law judge; exclusiveness of record, transcripts; briefs.
Rule 71. (1) The administrative law judge shall prepare a proposal for decision and serve it on the parties within a reasonable time after the hearing or the submission of written closing arguments. If the administrative law judge becomes unavailable, another administrative law judge may be assigned to read the record, including a transcription of the testimony, and to prepare a proposal for decision.
(2) A proposal for decision shall be based exclusively on the record made at the hearing. The administrative law judge may rely on his or her expertise in evaluating the facts included in the record. Except as provided for under section 77 of the act, the administrative law judge shall not consider facts not on the record.
(3) The administrative law judge may require or permit the parties to submit written closing arguments at a time specified. A party submitting a brief containing references to a transcript shall include the page and volume numbers of the transcript. A brief containing references to exhibits shall include the exhibit numbers and identify the page number of the exhibit cited.
History: 2003 MR 2, Eff. Jan. 29, 2003.

R 324.72 Proposal for decision; exceptions; written arguments; responses; review on the director's own motion.
Rule 72. (1) A party may file and serve exceptions and written argument supporting or opposing a proposal for decision

under a schedule established by the office.
(2) A party's written argument in support of an exception or supporting or opposing a proposal for decision shall do all of the following:
(a) Identify any specific findings of fact in the proposal for decision to which exception is taken and identify the evidence in the record supporting the party's view.
(b) Identify specifically the evidence from the record supporting a party's view that other factual findings should have been made.
(c) Use the names of witness and exhibit numbers when referring to the record, including transcript volumes and page numbers, if relevant.
(d) State any specific conclusions of law to which exception is taken and the basis for the exception.
(e) If it is believed other conclusions of law should have been reached, submit them in writing, identify the basis for them in the record, and provide arguments supporting the proposed conclusion.
(f) Identify any policy judgment or exercise of discretion in the proposal for decision with which there is disagreement, provide argument as to why a different policy or discretionary decision is appropriate, submit a specific statement of policy or decision to replace any challenged policy or discretionary decision, and identify factors in the relevant statutes and rules supporting the proposed policy or exercise of discretion.
(g) State specifically the proposed decision the final decision maker should render.
History: 2003 MR 2, Eff. Jan. 29, 2003.

R 324.73 Proposal for decision; request for oral argument; opportunity for rebuttal.
Rule 73. (1) A party desiring to make oral argument in support of exceptions to a proposal for decision or in addition to written argument shall include a request in the exceptions filed under R 324.72. Oral argument may be granted by leave of the final decision maker and may be limited in scope and duration. Oral argument shall not be permitted without a written request supported by written exceptions and arguments filed in a timely manner. If oral argument is granted, notice shall be served on the parties.
(2) If oral argument is granted, all parties shall be given an opportunity for rebuttal argument, which the final decision maker may limit as to scope and duration.
(3) The final decision maker may schedule oral argument without a request for oral argument by a party.
History: 2003 MR 2, Eff. Jan. 29, 2003.

R 324.74 Final decisions; evidence; date; basis for overturning proposal for decision; record for judicial review.
Rule 74. (1) Review of a proposal for decision by the final decision maker shall be restricted to the record made at the hearing and the exceptions and arguments submitted by the parties. Issues not raised in the written exceptions and arguments shall not be considered at oral argument. The final decision maker shall not accept additional testimony or exhibits.
(2) Except as otherwise provided by law, the final decision maker shall issue a final agency decision within a reasonable time after the date for filing of any exceptions or, if oral argument is permitted, a reasonable time after argument.
(3) The final decision maker may remand, reverse, modify, or set aside a proposal for decision and make a final decision which differs from the proposal for decision. The final decision maker shall consider whether the proposal for decision is deficient due to any of the following:
(a) Misapplied a rule, statute, or constitutional provision governing the issues involved.
(b) Adopted an incorrect interpretation of a rule or statute or an incorrect conclusion of law.
(c) Incorporated typographical, mathematical, or other obvious errors that affect the substantial rights of 1 or all of the parties to the action.
(d) Failed to address a relevant issue.
(e) Made factual findings inconsistent with the evidentiary record.
(f) Improperly excluded or included evidence that substantially affects the outcome of the case.
(4) The final decision maker's order shall include findings of fact and conclusions of law pursuant to section 85 of the act. The final decision maker may adopt the proposal for decision or any part of it as the final agency decision.
(5) The final agency decision in a contested case is the exhaustion of administrative remedies as set forth in section 301 of the act.
History: 2003 MR 2, Eff. Jan. 29, 2003.

R 324.75 Request for rehearing; objections; effect; remand for further consideration.
Rule 75. (1) A request for rehearing shall be addressed to the administrative law judge, served on the parties, and shall state the grounds upon which the moving party relies. A response to the motion shall not be filed, and there shall be no oral argument, unless the administrative law judge otherwise directs.

(2) Generally, and without restricting the discretion of the administrative law judge, a motion for rehearing or reconsideration which merely presents the same issues previously ruled on, either expressly or by reasonable implication, shall not be granted. The moving party shall demonstrate a palpable error by which the tribunal and the parties have been misled and show that a different disposition must result from the correction of the error. A rehearing may be ordered on grounds there is newly discovered evidence that could affect the outcome of the case only if the lack of its discovery is not attributable to the moving party.
(3) The final decision maker may determine the record or a proposal for decision is inadequate for purposes of his or her review or for judicial review, or that evidence was improperly included or excluded, and remand the case to the administrative law judge for further consideration.
History: 2003 MR 2, Eff. Jan. 29, 2003.

PART 8. DECLARATORY RULINGS

R 324.81 Declaratory rulings.
Rule 81. (1) An interested person requesting a declaratory ruling as to the applicability of a licensing statute, rule, or order administered by the department to an actual state of uncontested facts may do so on a form provided by the department. Requests regarding enforcement issues are not a proper subject for a declaratory ruling. The department shall not process a request that is incomplete. The request shall contain, at a minimum, all of the following information:
(a) The requesting person's name, mailing address, and telephone number.
(b) The requesting person's interest in the matter, including assertions regarding the person's legal standing to request a declaratory ruling.
(c) The statute, rule, or order to which the request applies.
(d) A detailed statement of the actual uncontested facts to which the statute, rule, or order may apply. Drawings, sketches, photographs, illustrations, and maps may be attached to the form.
(2) Within 60 days of receipt of the request, the department shall take 1 of the following actions:
(a) Deny the request and state the reasons for the denial.
(b) Grant the request and issue the declaratory ruling.
(c) Advise the person requesting the ruling that further clarification of the facts must be provided, or that the department requires additional time to conduct a review, including, but not limited to, an on-site investigation.
(3) If subrule (2)(c)of this rule is invoked, the department shall either deny or grant the request within 60 days after receiving satisfactory clarification of facts from the requesting person or from the date the department notifies the requesting person of the need for additional time to investigate.
(4) The department shall issue a declaratory ruling only in matters where all relevant facts are stipulated to by the requesting party and appropriate division. If relevant facts necessary to issue a declaratory ruling are contested, then a declaratory ruling shall not be issued.
(5) A denial or adverse decision of a declaratory ruling does not entitle a person to a contested case hearing.
History: 2003 MR 2, Eff. Jan. 29, 2003.

GEOLOGICAL SURVEY DIVISION

OIL AND GAS OPERATIONS

PART 1. GENERAL PROVISIONS

R 324.101
Source: 1996 AACS.

R 324.102
Source: 2002 AACS.

R 324.103
Source: 2002 AACS.

R 324.104
Source: 1996 AACS.

R 324.199
Source: 1996 AACS.

PART 2. PERMITS TO DRILL AND OPERATE

R 324.201
Source: 1996 AACS.

R 324.202
Source: 2002 AACS.

R 324.203
Source: 2002 AACS.

R 324.204
Source: 1996 AACS.

R 324.205
Source: 1996 AACS.

R 324.206
Source: 1996 AACS.

R 324.207
Source: 2002 AACS.

R 324.208
Source: 1996 AACS.

R 324.209
Source: 1996 AACS.

R 324.210
Source: 2002 AACS.

R 324.211
Source: 2002 AACS.

R 324.212
Source: 1996 AACS.

R 324.213
Source: 2002 AACS.

R 324.214
Source: 1996 AACS.

R 324.215
Source: 1996 AACS.

R 324.216
Source: 1996 AACS.

PART 3. SPACING AND LOCATION OF WELLS

R 324.301
Source: 1996 AACS.

R 324.302
Source: 1996 AACS.

R 324.303
Source: 1996 AACS.

R 324.304
Source: 1996 AACS.

PART 4. DRILLING AND WELL CONSTRUCTION

R 324.401
Source: 1996 AACS.

R 324.402
Source: 1996 AACS.

R 324.403
Source: 1996 AACS.

R 324.404
Source: 1996 AACS.

R 324.405
Source: 1996 AACS.

R 324.406
Source: 1996 AACS.

R 324.407
Source: 1996 AACS.

R 324.408
Source: 1996 AACS.

R 324.409
Source: 1996 AACS.

R 324.410
Source: 1996 AACS.

R 324.411
Source: 1996 AACS.

R 324.412
Source: 1996 AACS.

R 324.413
Source: 1996 AACS.

R 324.414
Source: 1996 AACS.

R 324.415
Source: 1996 AACS.

R 324.416

Source: 2001 AACS.

R 324.417
Source: 1996 AACS.

R 324.418
Source: 1996 AACS.

R 324.419
Source: 1996 AACS.

R 324.420
Source: 1996 AACS.

R 324.421
Source: 1996 AACS.

R 324.422
Source: 1996 AACS.

PART 5. COMPLETION AND OPERATION

R 324.501
Source: 2002 AACS.

R 324.502
Source: 1996 AACS.

R 324.503
Source: 1996 AACS.

R 324.504
Source: 2002 AACS.

R 324.505
Source: 1996 AACS.

R 324.506
Source: 1996 AACS.

R 324.507
Source: 1996 AACS.

R 324.508
Source: 1996 AACS.

R 324.509
Source: 1996 AACS.

R 324.510
Source: 1996 AACS.

R 324.511
Source: 2002 AACS.

PART 6. PRODUCTION AND PRORATION

R 324.601
Source: 1996 AACS.

R 324.602
Source: 1996 AACS.

R 324.603
Source: 1996 AACS.

R 324.604
Source: 1996 AACS.

R 324.605
Source: 1996 AACS.

R 324.606
Source: 1996 AACS.

R 324.607
Source: 1996 AACS.

R 324.608
Source: 1996 AACS.

R 324.609
Source: 1996 AACS.

R 324.610
Source: 1996 AACS.

R 324.611
Source: 1996 AACS.

R 324.612
Source: 1996 AACS.

R 324.613
Source: 1996 AACS.

PART 7. DISPOSAL OF OIL OR GAS FIELD WASTE, OR BOTH

R 324.701
Source: 1996 AACS.

R 324.702
Source: 1996 AACS.

R 324.703
Source: 1996 AACS.

R 324.704
Source: 1996 AACS.

R 324.705
Source: 1996 AACS.

PART 8. INJECTION WELLS

R 324.801
Source: 1996 AACS.

R 324.802
Source: 1996 AACS.

R 324.803
Source: 1996 AACS.

R 324.804
Source: 1996 AACS.

R 324.805
Source: 1996 AACS.

R 324.806
Source: 1996 AACS.

R 324.807
Source: 1996 AACS.

R 324.808
Source: 1996 AACS.

PART 9. PLUGGING

R 324.901
Source: 1996 AACS.

R 324.902
Source: 1996 AACS.

R 324.903
Source: 1996 AACS.

R 324.904
Source: 1996 AACS.

PART 10. WELL SITES AND SURFACE FACILITIES; PREVENTION OF FIRES, POLLUTION, AND DANGER TO, OR DESTRUCTION OF, PROPERTY OR LIFE

R 324.1001
Source: 1996 AACS.

R 324.1002
Source: 1996 AACS.

R 324.1003
Source: 1996 AACS.

R 324.1004
Source: 1996 AACS.

R 324.1005
Source: 1996 AACS.

R 324.1006
Source: 1996 AACS.

R 324.1007
Source: 1996 AACS.

R 324.1008
Source: 2001 AACS.

R 324.1009
Source: 1996 AACS.

R 324.1010
Source: 1996 AACS.

R 324.1011
Source: 1996 AACS.

R 324.1008
Source: 2001 AACS.

R 324.1012
Source: 1996 AACS.

R 324.1014
Source: 2002 AACS.

R 324.1015
Source: 1996 AACS.

R 324.1016
Source: 1996 AACS.

PART 11. HYDROGEN SULFIDE MANAGEMENT

R 324.1101
Source: 1996 AACS.

R 324.1102
Source: 1996 AACS.

R 324.1103
Source: 2001 AACS.

R 324.1104
Source: 1996 AACS.

R 324.1105
Source: 2001 AACS.

R 324.1106
Source: 1996 AACS.

R 324.1107
Source: 2002 AACS.

R 324.1108
Source: 1996 AACS.

R 324.1109
Source: 1996 AACS.

R 324.1110
Source: 2001 AACS.

R 324.1111
Source: 1996 AACS.

R 324.1112
Source: 1996 AACS.

R 324.1113
Source: 2001 AACS.

R 324.1114
Source: 1996 AACS.

R 324.1115
Source: 1996 AACS.

R 324.1116
Source: 1996 AACS.

R 324.1117
Source: 1996 AACS.

R 324.1118
Source: 1996 AACS.

R 324.1119
Source: 1996 AACS.

R 324.1120
Source: 1996 AACS.

R 324.1121
Source: 1996 AACS.

R 324.1122
Source: 2002 AACS.

R 324.1123
Source: 2002 AACS.

R 324.1124
Source: 1996 AACS.

R 324.1125
Source: 2001 AACS.

R 324.1126
Source: 1996 AACS.

R 324.1127
Source: 1996 AACS.

R 324.1128
Source: 1996 AACS.

R 324.1129
Source: 2001 AACS.

R 324.1130
Source: 2001 AACS.

PART 12. HEARINGS

R 324.1201
Source: 1996 AACS.

R 324.1202
Source: 1996 AACS.

R 324.1203
Source: 1996 AACS.

R 324.1204
Source: 1996 AACS.

R 324.1205
Source: 1996 AACS.

R 324.1206
Source: 1996 AACS.

R 324.1207
Source: 1996 AACS.

R 324.1208
Source: 1996 AACS.

R 324.1209
Source: 1996 AACS.

R 324.1210
Source: 1996 AACS.

R 324.1211
Source: 1996 AACS.

R 324.1212
Source: 1996 AACS.

PART 13. ENFORCEMENT

R 324.1301
Source: 2002 AACS.

DEPARTMENT OF ENVIRONMENTAL QUALITY

ENVIRONMENTAL ASSISTANCE DIVISION

CLEAN CORPORATE CITIZEN PROGRAM

R 324.1501
Source: 1998-2000 AACS.

R 324.1502
Source: 1998-2000 AACS.

R 324.1503
Source: 1998-2000 AACS.

R 324.1504
Source: 1998-2000 AACS.

R 324.1505
Source: 1998-2000 AACS.

R 324.1506
Source: 1998-2000 AACS.

R 324.1507
Source: 1998-2000 AACS.

R 324.1508
Source: 1998-2000 AACS.

R 324.1509.
Source: 1998-2000 AACS.

R 324.1510
Source: 1998-2000 AACS.

R 324.1511
Source: 1998-2000 AACS.

WASTE MANAGEMENT DIVISION

PART 5. SPILLAGE OF OIL AND POLLUTION MATERIALS

R 324.2001
Source: 2001 AACS.

R 324.2002
Source: 2001 AACS.

R 324.2003
Source: 2001 AACS.

R 324.2004
Source: 2001 AACS.

R 324.2005
Source: 2001 AACS.

R 324.2006
Source: 2001 AACS.

R 324.2007
Source: 2001 AACS.

R 324.2008
Source: 2001 AACS.

R 324.2009
Source: 2001 AACS.

DEPARTMENT OF ENVIRONMENTAL QUALITY

SURFACE WATER QUALITY DIVISION

CLEAN MICHIGAN INITIATIVE NONPOINT SOURCE POLLUTION CONTROL GRANTS

R 324.8801
Source: 1998-2000 AACS.

R 324.8802
Source: 1998-2000 AACS.

R 324.8803
Source: 1998-2000 AACS.

R 324.8804
Source: 1998-2000 AACS.

R 324.8805
Source: 1998-2000 AACS.

R 324.8806
Source: 1998-2000 AACS.

R 324.8807
Source: 1998-2000 AACS.

R 324.8808
Source: 1998-2000 AACS.

R 324.8809
Source: 1998-2000 AACS.

R 324.8810
Source: 1998-2000 AACS.

MICHIGAN DEPARTMENT OF ENVIRONMENTAL QUALITY

SURFACE WATER QUALITY DIVISION

CLEAN WATER FUND

R 324.8901
Source: 1998-2000 AACS.

R 324.8902
Source: 1998-2000 AACS.

R 324.8903
Source: 1998-2000 AACS.

R 324.8904
Source: 1998-2000 AACS.

R 324.8905
Source: 1998-2000 AACS.

R 324.8906

Source: 1998-2000 AACS.

R 324.8907
Source: 1998-2000 AACS.

R 324.8908
Source: 1998-2000 AACS.

R 324.8909
Source: 1998-2000 AACS.

R 324.8910
Source: 1998-2000 AACS.

R 324.8911
Source: 1998-2000 AACS.

R 324.8912
Source: 1998-2000 AACS.

R 324.8913
Source: 1998-2000 AACS.

R 324.8914
Source: 1998-2000 AACS.

R 324.8915
Source: 2001 AACS.

R 324.8916
Source: 1998-2000 AACS.

R 324.8917
Source: 1998-2000 AACS.

R 324.8918
Source: 1998-2000 AACS.

R 324.8919
Source: 1998-2000 AACS.

R 324.8920
Source: 1998-2000 AACS.

DEPARTMENT OF ENVIRONMENTAL QUALITY

ENVIRONMENTAL ASSISTANCE DIVISION

SMALL BUSINESS POLLUTION PREVENTION ASSISTANCE LOAN

R 324.14501
Source: 1998-2000 AACS.

R 324.14502
Source: 1998-2000 AACS.

R 324.14503
Source: 1998-2000 AACS.

R 324.14504
Source: 1998-2000 AACS.

R 324.14505
Source: 1998-2000 AACS.

R 324.14506
Source: 1998-2000 AACS.

R 324.14507
Source: 1998-2000 AACS.

R 324.14508
Source: 1998-2000 AACS.

DEPARTMENT OF ENVIRONMENTAL QUALITY

STORAGE TANK DIVISION

MICHIGAN UNDERGROUND STORAGE TANK QUALIFIED CONSULTANTS AND CERTIFIED PROFESSIONALS

R 324.21501
Source: 1998-2000 AACS.

R 324.21502
Source: 1998-2000 AACS.

R 324.21503
Source: 1998-2000 AACS.

R 324.21504
Source: 1998-2000 AACS.

R 324.21505
Source: 1998-2000 AACS.

R 324.21506
Source: 1998-2000 AACS.

R 324.21507
Source: 1998-2000 AACS.

R 324.21508
Source: 1998-2000 AACS.

R 324.21509
Source: 1998-2000 AACS.

R 324.21510
Source: 1998-2000 AACS.

R 324.21511
Source: 1998-2000 AACS.

R 324.21512
Source: 1998-2000 AACS.

R 324.21513
Source: 1998-2000 AACS.

R 324.21514
Source: 1998-2000 AACS.

R 324.21515
Source: 1998-2000 AACS.

R 324.21516
Source: 1998-2000 AACS.

DEPARTMENT OF COMMUNITY HEALTH

BUREAU OF DISEASE CONTROL AND LABORATORY SERVICES

CONTROL OF COMMUNICABLE DISEASES

R 325.1
Source: 1998-2000 AACS.

R 325.2
Source: 1998-2000 AACS.

R 325.3
Source: 1998-2000 AACS.

R 325.4
Source: 1998-2000 AACS.

R 325.5
Source: 1998-2000 AACS.

R 325.6
Source: 1998-2000 AACS.

R 325.7
Source: 1998-2000 AACS.

R 325.8
Source: 1998-2000 AACS.

R 325.9
Source: 1998-2000 AACS.

R 325.10
Source: 1998-2000 AACS.

R 325.11
Source: 1998-2000 AACS.

R 325.12
Source: 1998-2000 AACS.

R 325.13
Source: 1998-2000 AACS.

R 325.14
Source: 1998-2000 AACS.

R 325.15
Source: 1998-2000 AACS.

R 325.16
Source: 1998-2000 AACS.

R 325.17
Source: 1998-2000 AACS.

R 325.18
Source: 1998-2000 AACS.

R 325.19
Source: 1998-2000 AACS.

R 325.20
Source: 1998-2000 AACS.

R 325.21
Source: 1998-2000 AACS.

R 325.22
Source: 1998-2000 AACS.

R 325.23
Source: 1998-2000 AACS.

R 325.24
Source: 1998-2000 AACS.

R 325.25
Source: 1998-2000 AACS.

R 325.26
Source: 1998-2000 AACS.

R 325.27
Source: 1998-2000 AACS.

R 325.28
Source: 1998-2000 AACS.

R 325.29
Source: 1998-2000 AACS.

R 325.30
Source: 1998-2000 AACS.

R 325.31
Source: 1998-2000 AACS.

R 325.32

Source: 1998-2000 AACS.

R 325.33
Source: 1998-2000 AACS.

R 325.34
Source: 1998-2000 AACS.

R 325.35
Source: 1998-2000 AACS.

R 325.36
Source: 1998-2000 AACS.

R 325.37
Source: 1998-2000 AACS.

R 325.38
Source: 1998-2000 AACS.

R 325.39
Source: 1998-2000 AACS.

R 325.40
Source: 1998-2000 AACS.

R 325.41
Source: 1998-2000 AACS.

R 325.42
Source: 1998-2000 AACS.

R 325.43
Source: 1998-2000 AACS.

R 325.44
Source: 1998-2000 AACS.

R 325.45
Source: 1998-2000 AACS.

R 325.46
Source: 1998-2000 AACS.

R 325.47
Source: 1998-2000 AACS.

R 325.48
Source: 1998-2000 AACS.

R 325.49
Source: 1998-2000 AACS.

R 325.50
Source: 1998-2000 AACS.

R 325.51
Source: 1998-2000 AACS.

R 325.52
Source: 1998-2000 AACS.

R 325.53
Source: 1998-2000 AACS.

R 325.54
Source: 1998-2000 AACS.

R 325.55
Source: 1998-2000 AACS.

R 325.56
Source: 1998-2000 AACS.

R 325.57
Source: 1998-2000 AACS.

R 325.58
Source: 1998-2000 AACS.

R 325.59
Source: 1998-2000 AACS.

R 325.60
Source: 1981 AACS.

R 325.61
Source: 1997 AACS.

R 325.70
Source: 1997 AACS.

R 325.71
Source: 1997 AACS.

R 325.72
Source: 1997 AACS.

R 325.80
Source: 1997 AACS.

R 325.81
Source: 1997 AACS.

R 325.90
Source: 1997 AACS.

R 325.100
Source: 1997 AACS.

R 325.101
Source: 1997 AACS.

R 325.102
Source: 1997 AACS.

R 325.103
Source: 1997 AACS.

R 325.104
Source: 1997 AACS.

R 325.106
Source: 1997 AACS.

R 325.107
Source: 1997 AACS.

R 325.110
Source: 1997 AACS.

R 325.115
Source: 1997 AACS.

R 325.120
Source: 1997 AACS.

R 325.121
Source: 1997 AACS.

HEALTH LEGISLATION AND POLICY DEVELOPMENT

CHILDHOOD IMMUNIZATION REGISTRY

R 325.161
Source: 1997 AACS.

R 325.162
Source: 1997 AACS.

R 325.163
Source: 1997 AACS.

R 325.164
Source: 1997 AACS.

R 325.165
Source: 1997 AACS.

R 325.166
Source: 1997 AACS.

R 325.167
Source: 1997 AACS.

R 325.168
Source: 1997 AACS.

R 325.169
Source: 1997 AACS.

BUREAU OF INFECTIOUS DISEASE CONTROL

COMMUNICABLE AND RELATED DISEASES

R 325.171
Source: 1998-2000 AACS.

R 325.172
Source: 1998-2000 AACS.

R 325.173
Source: 1993 AACS.

R 325.174
Source: 1993 AACS.

R 325.175
Source: 1993 AACS.

R 325.176
Source: 1998-2000 AACS.

R 325.177
Source: 1993 AACS.

R 325.178
Source: 1998-2000 AACS.

R 325.179
Source: 1993 AACS.

R 325.180
Source: 1998-2000 AACS.

R 325.181
Source: 1993 AACS.

R 325.199
Source: 1993 AACS.

RABIES

R 325.201
Source: 1997 AACS.

OFFICE OF THE DIRECTOR

CONVALESCENT SERA AND VACCINES

R 325.210
Source: 1997 AACS.

R 325.211
Source: 1997 AACS.

R 325.212
Source: 1997 AACS.

R 325.213
Source: 1997 AACS.

R 325.214
Source: 1997 AACS.

R 325.215
Source: 1997 AACS.

R 325.216
Source: 1997 AACS.

R 325.217
Source: 1997 AACS.

R 325.218
Source: 1997 AACS.

R 325.219
Source: 1997 AACS.

R 325.220
Source: 1997 AACS.

R 325.221
Source: 1997 AACS.

R 325.222
Source: 1997 AACS.

R 325.223
Source: 1997 AACS.

R 325.224
Source: 1997 AACS.

POLIOMYELITIS VACCINE

R 325.231
Source: 1997 AACS.

R 325.232
Source: 1997 AACS.

R 325.233
Source: 1997 AACS.

R 325.234
Source: 1997 AACS.

R 325.235
Source: 1997 AACS.

R 325.236
Source: 1997 AACS.

R 325.237
Source: 1997 AACS.

R 325.238
Source: 1997 AACS.

R 325.239
Source: 1997 AACS.

DIABETES RESEARCH

R 325.271
Source: 1997 AACS.

R 325.272
Source: 1997 AACS.

R 325.273
Source: 1997 AACS.

R 325.274
Source: 1997 AACS.

R 325.275
Source: 1997 AACS.

KIDNEY TRAINING

R 325.281
Source: 1997 AACS.

R 325.282
Source: 1997 AACS.

R 325.283
Source: 1997 AACS.

R 325.284
Source: 1997 AACS.

BUREAU OF PERSONAL HEALTH SERVICES

MIDWIVES

R 325.321
Source: 1997 AACS.

R 325.322
Source: 1997 AACS.

R 325.323
Source: 1997 AACS.

R 325.324
Source: 1997 AACS.

R 325.325

Source: 1997 AACS.

R 325.326
Source: 1997 AACS.

R 325.327
Source: 1997 AACS.

R 325.328
Source: 1997 AACS.

R 325.329
Source: 1997 AACS.

R 325.330
Source: 1997 AACS.

OFFICE OF THE DIRECTOR

MINIMUM STANDARDS FOR GROUP DAY CARE OF CHILDREN

R 325.341
Source: 1997 AACS.

R 325.342
Source: 1997 AACS.

R 325.343
Source: 1997 AACS.

COMMUNICABLE DISEASES IN CHILDREN IN GROUP RESIDENCE, CARE, EDUCATION, AND CAMPING

R 325.351
Source: 1997 AACS.

R 325.352
Source: 1997 AACS.

SPECIAL AGENTS OF BUREAU OF RECORDS AND STATISTICS

R 325.361
Source: 1997 AACS.

BARBER SHOPS

R 325.451
Source: 1997 AACS.

FOOD ESTABLISHMENTS

R 325.592
Source: 1997 AACS.

R 325.593
Source: 1997 AACS.

BOTTLE CAPS

R 325.741
Source: 1997 AACS.

TRAILER COACH PARKS

R 325.746
Source: 1997 AACS.

BUREAU OF DISEASE CONTROL AND LABORATORY SERVICES

CONTROL OF TUBERCULOSIS

PART 1. STATE SUBSIDY

R 325.763
Source: 1997 AACS.

PART 2. ADMISSIONS TO TUBERCULOSIS HOSPITALS

R 325.771
Source: 1997 AACS.

R 325.772
Source: 1997 AACS.

R 325.773
Source: 1997 AACS.

R 325.775
Source: 1997 AACS.

PART 3. TRANSFERS, DISCHARGES, AND DEATHS

R 325.781
Source: 1997 AACS.

R 325.782
Source: 1997 AACS.

R 325.783
Source: 1997 AACS.

R 325.784
Source: 1997 AACS.

R 325.786
Source: 1997 AACS.

PART 4A. VOUCHERS FOR COUNTY CHARGE PATIENTS

R 325.801
Source: 1997 AACS.

R 325.802
Source: 1997 AACS.

R 325.803
Source: 1997 AACS.

R 325.804
Source: 1997 AACS.

PART 4B. VOUCHERS FOR STATE AT LARGE PATIENTS

R 325.811
Source: 1997 AACS.

R 325.812
Source: 1997 AACS.

R 325.813
Source: 1997 AACS.

R 325.814
Source: 1997 AACS.

R 325.815
Source: 1997 AACS.

R 325.816
Source: 1997 AACS.

R 325.817
Source: 1997 AACS.

R 325.818
Source: 1997 AACS.

R 325.820
Source: 1997 AACS.

PART 5. REIMBURSEMENTS FOR CARE OF PATIENTS

R 325.831
Source: 1997 AACS.

R 325.832
Source: 1997 AACS.

R 325.833
Source: 1997 AACS.

R 325.834
Source: 1997 AACS.

PART 6. RECALCITRANT PATIENTS

R 325.841

Source: 1997 AACS.

R 325.842
Source: 1997 AACS.

R 325.843
Source: 1997 AACS.

R 325.844
Source: 1997 AACS.

R 325.845
Source: 1997 AACS.

R 325.846
Source: 1997 AACS.

R 325.847
Source: 1997 AACS.

R 325.848
Source: 1997 AACS.

R 325.849
Source: 1997 AACS.

R 325.850
Source: 1997 AACS.

R 325.851
Source: 1997 AACS.

R 325.852
Source: 1997 AACS.

PART 7. REIMBURSEMENT PROCEDURE

R 325.861
Source: 1997 AACS.

R 325.862
Source: 1997 AACS.

R 325.863
Source: 1997 AACS.

R 325.864
Source: 1997 AACS.

R 325.865
Source: 1997 AACS.

R 325.866
Source: 1997 AACS.

R 325.867

Source: 1997 AACS.

R 325.871
Source: 1997 AACS.

R 325.872
Source: 1997 AACS.

R 325.873
Source: 1997 AACS.

R 325.874
Source: 1997 AACS.

R 325.875
Source: 1997 AACS.

PART 8. VOLUNTARY AGREEMENTS BY PATIENTS TO MAKE REIMBURSEMENT

R 325.881
Source: 1997 AACS.

R 325.882
Source: 1997 AACS.

R 325.883
Source: 1997 AACS.

R 325.884
Source: 1997 AACS.

R 325.885
Source: 1997 AACS.

R 325.886
Source: 1997 AACS.

PART 9. WITHHOLDING SUBSIDIES

R 325.891
Source: 1997 AACS.

PART 10. REPORTS OF CHEST X-RAYS

R 325.896
Source: 1997 AACS.

PART 11. EXAMINATION OF PERSONS IN HIGH EXPOSURE GROUPS

R 325.897
Source: 1997 AACS.

R 325.898
Source: 1997 AACS.

REIMBURSEMENT FOR OUTPATIENT SERVICES

R 325.901
Source: 1997 AACS.

R 325.902
Source: 1997 AACS.

HUMANE CARE AND USE OF ANIMALS

R 325.921
Source: 1980 AACS.

R 325.922
Source: 1980 AACS.

R 325.923
Source: 1980 AACS.

R 325.924
Source: 1980 AACS.

R 325.925
Source: 1980 AACS.

R 325.926
Source: 1980 AACS.

ANATOMY BOARD

ANATOMICAL GIFTS

R 325.951
Source: 1981 AACS.

R 325.952
Source: 1981 AACS.

R 325.953
Source: 1981 AACS.

R 325.954
Source: 1981 AACS.

R 325.955
Source: 1981 AACS.

BUREAU OF DISEASE CONTROL AND LABORATORY SERVICES

HUMANE USE OF ANIMALS

R 325.981
Source: 1997 AACS.

R 325.982
Source: 1997 AACS.

R 325.983
Source: 1997 AACS.

R 325.984
Source: 1997 AACS.

R 325.985
Source: 1997 AACS.

R 325.986
Source: 1997 AACS.

R 325.987
Source: 1997 AACS.

R 325.988
Source: 1997 AACS.

R 325.989
Source: 1997 AACS.

R 325.990
Source: 1997 AACS.

R 325.991
Source: 1997 AACS.

R 325.992
Source: 1997 AACS.

DEPARTMENT OF CONSUMER AND INDUSTRY SERVICES

HEALTH FACILITIES SERVICES ADMINISTRATION

MINIMUM STANDARDS FOR HOSPITALS

PART 3. OPERATIONAL RULES AND MINIMUM STANDARDS FOR ALL HOSPITAL-PHYSICAL PLANT, FACILITIES, EQUIPMENT, AND OPERATION

R 325.1053
Source: 1981 AACS.

R 325.1054
Source: 1981 AACS.

R 325.1056
Source: 1981 AACS.

DEPARTMENT OF COMMUNITY HEALTH

OFFICE OF THE DIRECTOR

DONATED AND UNCLAIMED DEAD HUMAN BODIES OR PARTS

R 325.1171
Source: 1997 AACS.

R 325.1172
Source: 1997 AACS.

R 325.1173
Source: 1997 AACS.

R 325.1174
Source: 1997 AACS.

R 325.1175
Source: 1997 AACS.

R 325.1176
Source: 1997 AACS.

R 325.1177
Source: 1997 AACS.

HEARINGS

R 325.1201
Source: 1997 AACS.

R 325.1202
Source: 1997 AACS.

R 325.1203
Source: 1997 AACS.

R 325.1204
Source: 1997 AACS.

R 325.1205
Source: 1997 AACS.

R 325.1206
Source: 1997 AACS.

DEPARTMENT OF CONSUMER AND INDUSTRY SERVICES
BOARD OF EXAMINERS FOR SANITARIANS

R 325.1401
Source: 1997 AACS.

R 325.1402
Source: 1997 AACS.

R 325.1403
Source: 1997 AACS.

R 325.1404
Source: 1997 AACS.

R 325.1405
Source: 1997 AACS.

R 325.1406
Source: 1997 AACS.

R 325.1407
Source: 1997 AACS.

R 325.1408
Source: 1997 AACS.

R 325.1409
Source: 1997 AACS.

R 325.1410
Source: 1997 AACS.

R 325.1411
Source: 1997 AACS.

R 325.1412
Source: 1997 AACS.

DEPARTMENT OF COMMUNITY HEALTH

POLICY AND LEGAL AFFAIRS ADMINISTRATION

PHENYLKETONURIA TEST ON NEWBORN INFANTS

R 325.1471 Rescission.
History: 1954 ACS 45, Eff. Feb. 14, 1966; 1979 AC; rescinded 2003 MR 19, Eff. Oct. 15, 2003.

R 325.1472 Rescission.
History: 1954 ACS 45, Eff. Feb. 14, 1966; 1979 AC; rescinded 2003 MR 19, Eff. Oct. 15, 2003.

R 325.1473 Rescission.
History: 1954 ACS 45, Eff. Feb. 14, 1966; 1979 AC; rescinded 2003 MR 19, Eff. Oct. 15, 2003.

R 325.1474 Rescission.
History: 1954 ACS 45, Eff. Feb. 14, 1966; 1979 AC; rescinded 2003 MR 19, Eff. Oct. 15, 2003.

R 325.1475 Rescission.
History: 1954 ACS 45, Eff. Feb. 14, 1966; 1979 AC; rescinded 2003 MR 19, Eff. Oct. 15, 2003.

DEPARTMENT OF COMMUNITY HEALTH

OFFICE OF THE DIRECTOR

PRESCHOOL VISION TESTS

R 325.1481
Source: 1997 AACS.

DISEASE CONTROL IN SCHOOLS

R 325.1491
Source: 1997 AACS.

DEPARTMENT OF AGRICULTURE

AGRICULTURAL LABOR CAMPS

R 325.1501
Source: 1997 AACS.

R 325.1502
Source: 1997 AACS.

R 325.1503
Source: 1997 AACS.

R 325.1504
Source: 1997 AACS.

R 325.1505
Source: 1997 AACS.

R 325.1506
Source: 1997 AACS.

R 325.1507
Source: 1997 AACS.

R 325.1508
Source: 1997 AACS.

R 325.1509
Source: 1997 AACS.

R 325.1510
Source: 1997 AACS.

R 325.1511
Source: 1997 AACS.

R 325.1512
Source: 1997 AACS.

R 325.1513
Source: 1997 AACS.

R 325.1514
Source: 1997 AACS.

R 325.1515
Source: 1997 AACS.

R 325.1531
Source: 1997 AACS.

R 325.1532
Source: 1997 AACS.

R 325.1533
Source: 1997 AACS.

R 325.1534
Source: 1997 AACS.

R 325.1535
Source: 1997 AACS.

R 325.1536
Source: 1997 AACS.

DEPARTMENT OF ENVIRONMENTAL QUALITY

DRINKING WATER AND RADIOLOGICAL PROTECTION DIVISION

MEDICAL WASTE PRODUCING FACILITIES

325.1541
Source: 1998-2000 AACS.

325.1542
Source: 1998-2000 AACS.

325.1543
Source: 1998-2000 AACS.

325.1544
Source: 1998-2000 AACS.

325.1545
Source: 1998-2000 AACS.

325.1546
Source: 1998-2000 AACS.

325.1547
Source: 1998-2000 AACS.

325.1548
Source: 1998-2000 AACS.

325.1549
Source: 1998-2000 AACS.

DEPARTMENT OF ENVIRONMENTAL QUALITY

DIVISION OF ENVIRONMENTAL HEALTH

CAMPGROUNDS

R 325.1551
Source: 1998-2000 AACS.

R 325.1552
Source: 1998-2000 AACS.

R 325.1553
Source: 1998-2000 AACS.

R 325.1554
Source: 1998-2000 AACS.

R 325.1555
Source: 1998-2000 AACS.

R 325.1555a
Source: 1998-2000 AACS.

R 325.1555b
Source: 1998-2000 AACS.

R 325.1556
Source: 1998-2000 AACS.

R 325.1556a
Source: 1998-2000 AACS.

R 325.1556b
Source: 1998-2000 AACS.

R 325.1557
Source: 1998-2000 AACS.

R 325.1558
Source: 1998-2000 AACS.

R 325.1559
Source: 1998-2000 AACS.

R 325.1560
Source: 1998-2000 AACS.

R 325.1561
Source: 1998-2000 AACS.

R 325.1562
Source: 1998-2000 AACS.

R 325.1563
Source: 1998-2000 AACS.

R 325.1564
Source: 1998-2000 AACS.

R 325.1566
Source: 1998-2000 AACS.

R 325.1568
Source: 1998-2000 AACS.

R 325.1569
Source: 1987 AACS.

R 325.1571
Source: 1998-2000 AACS.

R 325.1574
Source: 1998-2000 AACS.

R 325.1576
Source: 1998-2000 AACS.

R 325.1585
Source: 1987 AACS.

R 325.1586
Source: 1998-2000 AACS.

R 325.1599
Source: 1998-2000 AACS.

DIVISION OF WATER SUPPLY

GROUNDWATER QUALITY CONTROL

PART 1. WELL CONSTRUCTION CODE

R 325.1601
Source: 1994 AACS.

R 325.1601a
Source: 1994 AACS.

R 325.1602
Source: 1994 AACS.

R 325.1603
Source: 1994 AACS.

R 325.1603a
Source: 1994 AACS.

R 325.1604
Source: 1994 AACS.

R 325.1605
Source: 1994 AACS.

R 325.1606
Source: 1994 AACS.

R 325.1607
Source: 1994 AACS.

R 325.1608
Source: 1994 AACS.

R 325.1610
Source: 1994 AACS.

R 325.1611
Source: 1994 AACS.

R 325.1612
Source: 1994 AACS.

R 325.1613
Source: 1994 AACS.

R 325.1621

Source: 1994 AACS.

R 325.1622
Source: 1994 AACS.

R 325.1624
Source: 1994 AACS.

R 325.1625
Source: 1994 AACS.

R 325.1626
Source: 1994 AACS.

R 325.1627
Source: 1994 AACS.

R 325.1631
Source: 1997 AACS.

R 325.1631a
Source: 1994 AACS.

R 325.1631b
Source: 1994 AACS.

R 325.1631c
Source: 1994 AACS.

R 325.1631d
Source: 1994 AACS.

R 325.1632
Source: 1994 AACS.

R 325.1632a
Source: 1994 AACS.

R 325.1633
Source: 1997 AACS.

R 325.1633a
Source: 1994 AACS.

R 325.1634
Source: 1997 AACS.

R 325.1634a
Source: 1994 AACS.

R 325.1635
Source: 1994 AACS.

R 325.1636
Source: 1997 AACS.

R 325.1637
Source: 1994 AACS.

R 325.1637a
Source: 1994 AACS.

R 325.1638
Source: 1994 AACS.

R 325.1639
Source: 1994 AACS.

R 325.1640
Source: 1994 AACS.

R 325.1641
Source: 1994 AACS.

R 325.1642
Source: 1994 AACS.

R 325.1651
Source: 1994 AACS.

R 325.1652
Source: 1997 AACS.

R 325.1653
Source: 1994 AACS.

R 325.1653a
Source: 1994 AACS.

R 325.1654
Source: 1994 AACS.

R 325.1655
Source: 1994 AACS.

R 325.1656
Source: 1994 AACS.

R 325.1656a
Source: 1994 AACS.

R 325.1657
Source: 1994 AACS.

R 325.1657a
Source: 1994 AACS.

R 325.1658
Source: 1994 AACS.

R 325.1661
Source: 1994 AACS.

R 325.1662
Source: 1994 AACS.

R 325.1663
Source: 1994 AACS.

R 325.1664
Source: 1994 AACS.

R 325.1665
Source: 1994 AACS.

R 325.1666
Source: 1997 AACS.

R 325.1667
Source: 1994 AACS.

R 325.1668
Source: 1994 AACS.

R 325.1669
Source: 1994 AACS.

R 325.1670
Source: 1994 AACS.

R 325.1671
Source: 1997 AACS.

R 325.1672
Source: 1994 AACS.

R 325.1673
Source: 1994 AACS.

R 325.1674
Source: 1994 AACS.

R 325.1674a
Source: 1994 AACS.

R 325.1675
Source: 1994 AACS.

R 325.1676
Source: 1994 AACS.

PART 2. DRILLING CONTRACTORS' AND PUMP INSTALLERS' REGISTRATION

R 325.1701
Source: 1994 AACS.

R 325.1701a
Source: 1994 AACS.

R 325.1702
Source: 1994 AACS.

R 325.1703
Source: 1994 AACS.

R 325.1704
Source: 1994 AACS.

R 325.1705
Source: 1997 AACS.

R 325.1705a
Source: 1994 AACS.

R 325.1706
Source: 1994 AACS.

R 325.1707
Source: 1994 AACS.

R 325.1707a
Source: 1994 AACS.

R 325.1708
Source: 1994 AACS.

R 325.1709
Source: 1994 AACS.

R 325.1711
Source: 1994 AACS.

PART 3. DRILLING MACHINES AND SERVICE VEHICLES

R 325.1721
Source: 1994 AACS.

R 325.1722
Source: 1994 AACS.

NURSING HOMES

R 325.1901
Source: 1997 AACS.

R 325.1909
Source: 1997 AACS.

R 325.1911
Source: 1997 AACS.

R 325.1912
Source: 1997 AACS.

R 325.1913
Source: 1997 AACS.

R 325.1914
Source: 1997 AACS.

R 325.1915
Source: 1997 AACS.

R 325.1916
Source: 1997 AACS.

R 325.1919
Source: 1997 AACS.

R 325.1923
Source: 1997 AACS.

R 325.1925
Source: 1997 AACS.

R 325.1927
Source: 1997 AACS.

R 325.1928
Source: 1997 AACS.

R 325.1931
Source: 1997 AACS.

R 325.1933
Source: 1997 AACS.

R 325.1935
Source: 1997 AACS.

R 325.1936
Source: 1997 AACS.

R 325.1937
Source: 1997 AACS.

R 325.1938
Source: 1997 AACS.

R 325.1939
Source: 1997 AACS.

R 325.1941
Source: 1997 AACS.

R 325.1942
Source: 1997 AACS.

R 325.1943
Source: 1997 AACS.

R 325.1945
Source: 1997 AACS.

R 325.1947
Source: 1997 AACS.

R 325.1951
Source: 1997 AACS.

R 325.1952
Source: 1997 AACS.

R 325.1953
Source: 1997 AACS.

R 325.1954
Source: 1997 AACS.

R 325.1957
Source: 1997 AACS.

R 325.1959
Source: 1997 AACS.

R 325.1961
Source: 1997 AACS.

R 325.1962
Source: 1997 AACS.

R 325.1963
Source: 1997 AACS.

R 325.1964
Source: 1997 AACS.

R 325.1965
Source: 1997 AACS.

R 325.1967
Source: 1997 AACS.

R 325.1968
Source: 1997 AACS.

R 325.1969
Source: 1997 AACS.

R 325.1971
Source: 1997 AACS.

R 325.1972
Source: 1997 AACS.

R 325.1973
Source: 1997 AACS.

R 325.1974
Source: 1997 AACS.

R 325.1975
Source: 1997 AACS.

R 325.1981
Source: 1997 AACS.

R 325.1982

Source: 1997 AACS.

R 325.1983
Source: 1997 AACS.

R 325.1984
Source: 1997 AACS.

R 325.1985
Source: 1997 AACS.

R 325.1986
Source: 1997 AACS.

R 325.1991
Source: 1997 AACS.

R 325.1993
Source: 1997 AACS.

R 325.1995
Source: 1997 AACS.

R 325.1997
Source: 1997 AACS.

R 325.2001
Source: 1997 AACS.

R 325.2002
Source: 1997 AACS.

R 325.2004
Source: 1997 AACS.

R 325.2005
Source: 1997 AACS.

R 325.2007
Source: 1997 AACS.

R 325.2011
Source: 1997 AACS.

R 325.2012
Source: 1997 AACS.

R 325.2013
Source: 1997 AACS.

R 325.2014
Source: 1997 AACS.

R 325.2015
Source: 1997 AACS.

R 325.2016
Source: 1997 AACS.

R 325.2017
Source: 1997 AACS.

R 325.2018
Source: 1997 AACS.

R 325.2019
Source: 1997 AACS.

R 325.2020
Source: 1997 AACS.

R 325.2021
Source: 1997 AACS.

R 325.2022
Source: 1997 AACS.

R 325.2023
Source: 1997 AACS.

R 325.2024
Source: 1997 AACS.

R 325.2025
Source: 1997 AACS.

R 325.2026
Source: 1997 AACS.

R 325.2027
Source: 1997 AACS.

R 325.2028
Source: 1997 AACS.

R 325.2029
Source: 1997 AACS.

R 325.2031
Source: 1997 AACS.

R 325.2032
Source: 1997 AACS.

R 325.2033
Source: 1997 AACS.

R 325.2034
Source: 1997 AACS.

R 325.2035
Source: 1997 AACS.

R 325.2036
Source: 1997 AACS.

R 325.2037
Source: 1997 AACS.

R 325.2038
Source: 1997 AACS.

R 325.2041
Source: 1997 AACS.

R 325.2051
Source: 1997 AACS.

R 325.2052
Source: 1997 AACS.

R 325.2053
Source: 1997 AACS.

R 325.2055
Source: 1997 AACS.

R 325.2057
Source: 1997 AACS.

R 325.2059
Source: 1997 AACS.

R 325.2061
Source: 1997 AACS.

R 325.2062
Source: 1997 AACS.

R 325.2064
Source: 1997 AACS.

R 325.2065
Source: 1997 AACS.

R 325.2066
Source: 1997 AACS.

R 325.2068
Source: 1997 AACS.

R 325.2071
Source: 1997 AACS.

R 325.2072
Source: 1997 AACS.

R 325.2073

Source: 1997 AACS.

R 325.2074
Source: 1997 AACS.

R 325.2075
Source: 1997 AACS.

R 325.2081
Source: 1997 AACS.

R 325.2082
Source: 1997 AACS.

R 325.2083
Source: 1997 AACS.

R 325.2084
Source: 1997 AACS.

R 325.2085
Source: 1997 AACS.

R 325.2091
Source: 1997 AACS.

R 325.2092
Source: 1997 AACS.

R 325.2093
Source: 1997 AACS.

R 325.2094
Source: 1997 AACS.

R 325.2095
Source: 1997 AACS.

R 325.2096
Source: 1997 AACS.

R 325.2097
Source: 1997 AACS.

DEPARTMENT OF COMMUNITY HEALTH

BUREAU OF ENVIRONMENTAL AND OCCUPATIONAL HEALTH

PUBLIC BATHING BEACHES

R 325.2101
Source: 1995 AACS.

R 325.2102
Source: 1995 AACS.

R 325.2103
Source: 1995 AACS.

DEPARTMENT OF ENVIRONMENTAL QUALITY

ENVIRONMENTAL AND OCCUPATIONAL HEALTH SERVICES ADMINISTRATION

PUBLIC SWIMMING POOLS

PART 1. GENERAL PROVISIONS

R 325.2111
Source: 2001 AACS.

R 325.2113
Source: 2001 AACS.

R 325.2113a
Source: 2001 AACS.

R 325.2114
Source: 2001 AACS.

R 325.2115
Source: 2001 AACS.

R 325.2116
Source: 2001 AACS.

R 325.2117
Source: 2001 AACS.

R 325.2118
Source: 2001 AACS.

R 325.2118a
Source: 2001 AACS.

R 325.2118d
Source: 2001 AACS.

PART 2. CONSTRUCTION

R 325.2121
Source: 2001 AACS.

R 325.2122
Source: 2001 AACS.

R 325.2123
Source: 2001 AACS.

R 325.2124
Source: 2001 AACS.

R 325.2125

Source: 2001 AACS.

R 325.2126
Source: 2001 AACS.

R 325.2127
Source: 2001 AACS.

R 325.2128
Source: 2001 AACS.

R 325.2129
Source: 2001 AACS.

R 325.2129a
Source: 2001 AACS.

R 325.2131
Source: 2001 AACS.

R 325.2132
Source: 2001 AACS.

R 325.2133
Source: 2001 AACS.

R 325.2134
Source: 2001 AACS.

R 325.2135
Source: 2001 AACS.

R 325.2136
Source: 2001 AACS.

R 325.2137
Source: 2001 AACS.

R 325.2138
Source: 2001 AACS.

R 325.2141
Source: 2001 AACS.

R 325.2142
Source: 2001 AACS.

R 325.2143
Source: 2001 AACS.

R 325.2143a
Source: 2001 AACS.

R 325.2144
Source: 2001 AACS.

R 325.2145
Source: 2001 AACS.

R 325.2146
Source: 2001 AACS.

R 325.2151
Source: 2001 AACS.

R 325.2152
Source: 2001 AACS.

R 325.2153
Source: 2001 AACS.

R 325.2154
Source: 2001 AACS.

R 325.2155
Source: 2001 AACS.

R 325.2156
Source: 2001 AACS.

R 325.2157
Source: 2001 AACS.

R 325.2158
Source: 2001 AACS.

R 325.2159
Source: 2001 AACS.

R 325.2161
Source: 2001 AACS.

R 325.2163
Source: 2001 AACS.

R 325.2165
Source: 2001 AACS.

R 325.2171
Source: 2001 AACS.

R 325.2174
Source: 2001 AACS.

R 325.2175
Source: 2001 AACS.

R 325.2176
Source: 2001 AACS.

R 325.2178
Source: 2001 AACS.

R 325.2179
Source: 2001 AACS.

R 325.2181
Source: 2001 AACS.

R 325.2182
Source: 2001 AACS.

R 325.2183
Source: 2001 AACS.

R 325.2184
Source: 2001 AACS.

PART 3. OPERATION AND USE

R 325.2191
Source: 2001 AACS.

R 325.2192
Source: 2001 AACS.

R 325.2193
Source: 2001 AACS.

R 325.2194
Source: 2001 AACS.

R 325.2194a
Source: 2001 AACS.

R 325.2195
Source: 2001 AACS.

R 325.2196
Source: 2001 AACS.

R 325.2197
Source: 2001 AACS.

R 325.2198
Source: 2001 AACS.

R 325.2199
Source: 2001 AACS.

DEPARTMENT OF CONSUMER AND INDUSTRY SERVICES

OFFICE OF DIRECTOR

AMBULANCES

R 325.2201
Source: 1997 AACS.

R 325.2202
Source: 1997 AACS.

R 325.2203
Source: 1997 AACS.

R 325.2204

Source: 1997 AACS.

R 325.2205
Source: 1997 AACS.

R 325.2206
Source: 1997 AACS.

R 325.2207
Source: 1997 AACS.

R 325.2208
Source: 1997 AACS.

BUREAU OF HEALTH CARE ADMINISTRATION

ADVANCED EMERGENCY MEDICAL SERVICES

R 325.2211
Source: 1997 AACS.

R 325.2221
Source: 1997 AACS.

R 325.2222
Source: 1997 AACS.

R 325.2223
Source: 1997 AACS.

R 325.2224
Source: 1997 AACS.

R 325.2225
Source: 1997 AACS.

R 325.2226
Source: 1997 AACS.

R 325.2227
Source: 1997 AACS.

R 325.2228
Source: 1997 AACS.

R 325.2231
Source: 1997 AACS.

R 325.2232
Source: 1997 AACS.

R 325.2233
Source: 1997 AACS.

R 325.2234
Source: 1997 AACS.

R 325.2241

Source: 1997 AACS.

R 325.2242
Source: 1997 AACS.

R 325.2243
Source: 1997 AACS.

R 325.2244
Source: 1997 AACS.

R 325.2245
Source: 1997 AACS.

R 325.2246
Source: 1997 AACS.

DEPARTMENT OF CONSUMER AND INDUSTRY SERVICES

DIRECTOR'S OFFICE

OCCUPATIONAL HEALTH STANDARDS

R 325.2401 Scope.
Rule 1. These rules apply only to places of employment.
History: 1954 ACS 61, Eff. Feb. 16, 1970; 1979 AC; 2003 MR 15, Eff. Aug. 19, 2003.

R 325.2402 General definitions.
Rule 2. As used in these rules:
(a) "Aerosol" means particulate matter suspended in air.
(b) "Contaminant" means an airborne material capable of causing occupational disease or significant physiological disturbances to a person, and includes, but is not limited to, the substances listed in R 325.2413 to R 325.2419.
(c) "Director" means the director of the department of consumer and industry services or the designee of the director.
(d) "Employer" means an individual or type of organization which has in its employ 1 or more individuals performing services for it.
(e) "Gas" means a normally formless fluid which occupies a space or enclosure and which can be changed to the liquid or solid state by the effect of increased pressure or decreased temperature, or both.
(f) "Inert gas" means a gas or vapor which acts primarily as a simple asphyxiant without other significant physiological effect, recognizing that an inert gas may have flammable or explosive characteristics.
(g) "Inert particulate" means an aerosol which does not produce significant organic disease or toxic effect in a lung-tissue reaction from any of the following:
(i) The architecture of the air spaces remains intact.
(ii) Collagen (scar tissue) is not formed to a significant extent.
(iii) The tissue reaction is potentially reversible.
(h) "Particulate matter" means fine solid or liquid particles.
(i) "Physical agent" means a form of energy transmitted directly or through the air from the point of emission to the receiver.
May 2, 2003
(j) "Vapor" means the gaseous state of a substance.
History: 1954 ACS 61, Eff. Feb. 16, 1970; 1954 ACS 68, Eff. June 10, 1971; 1979 AC; 2003 MR 15, Eff. Aug. 19, 2003.

R 325.2403 Definitions pertaining to contaminants.
Rule 3. As used in these rules:
(a) "Maximum allowable concentration" or "MAC" means the threshold limit value or the time-weighted average 8-hour airborne concentration of a contaminant to which a person may be safely exposed. R 325.2413 to R 325.2419, tables 1 to 7, refer to the MAC of a particular contaminant.
(b) "Mg/M^3" means milligrams of particulate per cubic meter of air.

(c) "Mppcf" means millions of particulates per cubic foot of air based on impinger samples counted by light field microscopic techniques.
(d) "Non-respirable atmosphere" means an atmosphere which contains insufficient oxygen, or an elevated level of contaminants, which may render a person incapable of self-rescue.
(e) "Ppm" means parts of vapor or gas per million parts of air by volume at 25 degrees Celsius and 760 millimeters of mercury pressure.
(f) "Source" means a process or equipment which releases a contaminant into the air in concentrations exceeding the MAC.
History: 1954 ACS 61, Eff. Feb. 16, 1970; 1979 AC; 2003 MR 15, Eff. Aug. 19, 2003.

R 325.2404 Definitions pertaining to noise.
Rule 4. As used in these rules:
(a) "Auditory protective equipment" means ear plugs, muffs, or other protective devices worn by an exposed person to attenuate airborne noise pressure in the ear canal.
(b) "Broad-band noise" means noise generally distributed throughout the sound frequency spectrum.
(c) "Continuous noise" means an uninterrupted noise or more than 60 noises per minute.
(d) "dBA" means the airborne sound pressure level measured with the "A" weighting network of a sound level meter.
(e) "Decibel" or "dB" means a dimensionless unit expressing the ratio of 2 sound quantities in logarithmic form, 1 of which quantities is a reference level of 0.0002 microbar.
(f) "Impact noise meter" means an instrument used for the measurement of peak sound pressures of impulse.
(g) "Impulse noise" means a single noise or 60 or less noises per minute.
(h) "Noise" means airborne sound in the frequency range from 20 to 20,000 hertz or cycles per second.
(i) "Sound level meter" means an instrument, whose characteristics comply with those specified in the American standards association, standard S1.4-1961, used for the measurement of the airborne sound pressure level.
History: 1954 ACS 61, Eff. Feb. 16, 1970; 1979 AC; 2003 MR 15, Eff. Aug. 19, 2003.

R 325.2405 Definitions pertaining to respirators.
Rule 5. As used in these rules:
(a) "Atmosphere immediately dangerous to life or health" means a nonrespirable atmosphere.
(b) "Canister" means a container filled with air-purifying media to remove gases and vapors from air drawn through the container. The canister may also contain an aerosol filter to remove solid or liquid particulate matter.
(c) "Cartridge" means a canister having reduced air-purifying capacity.
(d) "Facepiece" means that portion of a respirator that is designed to make a gastight or dusttight fit with the face and includes the headbands, exhalation valves, and connections for an air-purifying device or respirable-gas source. A half-mask facepiece covers the wearer's nose and mouth. A full-mask facepiece covers the wearer's nose, mouth, and eyes.
(e) "Filter" means a media used in a respirator to remove solid or liquid particulate matter from air drawn through the respirator.
(f) "Respiratory protective equipment" means a device or system designed to protect the wearer from inhalation of unhealthful atmospheres.
(g) "Respirator" means a type of respiratory protective equipment.
History: 1954 ACS 61, Eff. Feb. 16, 1970; 1979 AC; 2003 MR 15, Eff. Aug. 19, 2003.

R 325.2410 Definitions pertaining to controls.
Rule 10. As used in these rules:
(a) "Control" means the limitation of worker exposure to contaminate levels not exceeding the MAC.
(b) "Controlled process" means an arrangement of equipment to control the contaminant by means of suitable design measures.
(c) "Enclosure" means a room, booth, or exhaust hood that confines contaminants at their sources.
(d) "General ventilation" means the supply and removal of air from a space to dilute or remove contaminants.
(e) "Local exhaust ventilation system" means an arrangement of exhaust hoods, ducts, and fans that removes air to control a contaminant at its source.
(f) "Process space" means a tunnel, process equipment, shaft, or enclosed space.
(g) "Supply ventilation system" means an arrangement of inlet openings or equipment to introduce outside air into the working environment.
History: 1954 ACS 61, Eff. Feb. 16, 1970; 1954 ACS 68, Eff. June 10, 1971; 1979 AC; 2003 MR 15, Eff. Aug. 19, 2003.

R 325.2411 Contaminants; exposure; MACs.

Rule 11. (1) An employer shall not allow the exposure of a person to concentrations of a contaminant in excess of the limit expressed by the contaminant's MAC as established in R 325.2412 to R 325.2419.
(2) An employer shall not allow the exposure of a person to a contaminant or combination of contaminants in concentrations which are hazardous or injurious to the person's health.
History: 1954 ACS 61, Eff. Feb. 16, 1970; 1979 AC; 2003 MR 15, Eff. Aug. 19, 2003.

R 325.2412 Maximum allowable concentrations.
Rule 12. (1) Maximum allowable concentrations of air contaminants based on a repeated 8-hour work day exposure are in tables 1 to 7 in R 325.2413 to R 325.2419.
(2) A substance in tables 1 to 6 in R 325.2413 to R 325.2418, which is preceded by A, C, or S, is an especially hazardous contaminant and all of the following precautions shall be taken:
(a) If the substance is preceded by "A," then the employer shall not allow a person or any part of his or her anatomy to be exposed to or come in contact with the substance by any respiratory, oral, or skin route.
(b) If the substance is preceded by "C," then its MAC means the highest concentration at which an employer may allow a person to be exposed at any time.
(c) If the substance is preceded by "S," then an employer shall provide necessary precautions against skin absorption of the contaminant by a person.
History: 1954 ACS 61, Eff. Feb. 16, 1970; 1979 AC; 2003 MR 15, Eff. Aug. 19, 2003.

R 325.2413 Maximum allowable concentrations for substances A and B.

Rule 13. Table 1 reads as follows:

Table 1

		MAC	
	Substance	**ppm**	**mg/m^3**
	Abate	---	15
	Acetaldehyde	200	360
	Acetic acid	10	25
	Acetic anhydride	5	20
	Acetone	1,000	2,400
	Acetonitrile	40	70
	Acetylene	Inert gas	
	Acetylene dichloride, see 1,2-Dichloroethylene		
	Acetylene tetrabromide	1	14
	Acrolein	0.1	0.25
S	Acrylamide	---	0.3
S	Acrylonitrile (see R 325.51501 et seq.*)		
S	Aldrin	---	0.25
S	Allyl alcohol	2	5
	Allyl chloride	1	3
C	Allyl glycidyl ether (AGE)	10	45
	Allyl propyl disulfide	2	12
	Alundum, (Al_2O_3)	Inert dust	
	2-Aminoethanol, see Ethanolamine		
	2-Aminopyridine	0.5	2
	Ammonia	50	35
	Ammonium sulfamate (amate)	---	15
	n-Amyl acetate	100	525
	sec-Amyl acetate	125	650
S	Aniline	5	19
S	Anisidine (o,p-isomers)	---	0.5
	Antimony & compounds (as Sb)	---	0.5
	ANTU (alpha naphthyl thiourea)	---	0.3
	Argon	Inert gas	
	Arsenic, inorganic compounds	---	0.5

	Arsenic, organic compounds (as As)	---	0.5
	Arsine	0.05	0.2
S	Azinphos-methyl	---	0.2
	Barium (soluble compounds)	---	0.5
S,C	Benzene (benzol) (see R 325.77101 et seq.*)		
A,S	Benzidine	---	---
	P-Benzoquinone, see Quinone		
	Benzoyl peroxide	---	5
	Benzyl chloride	1	5
	Beryllium	---	0.002
	Biphenyl, see Diphenyl		
	Bisphenol A, see Diglycidyl ether		
	Boron oxide	---	15
	Boron tribromide	1	10
C	Boron trifluoride	1	3
	Bromine	0.1	0.7
	Bromine pentafluoride	0.1	---
S	Bromoform	0.5	5
	Butadiene (1,3-butadiene) (see R 325.50091 et seq.*)		
	Butanethiol, see Butyl mercaptan		
	2-Butanone	200	590
S	2-Butoxy ethanol (butyl cellosolve)	50	240
	Butyl acetate (n-butyl acetate)	150	710
	sec-Butyl acetate	200	950
	tert-Butyl acetate	200	950
	Butyl alcohol	100	300
	sec-Butyl alcohol	150	450
	tert-Butyl alcohol	100	300
S,C	Butylamine	5	15
S,C	tert-Butyl chromate (as $Cr0_3$)	---	0.1
	n-Butyl glycidyl ether (BGE)	50	270
	Butyl mercaptan	0.5	1.5
	p-tert-Butyltoluene	10	60

A, C, and S See R 325.2412.

* Caution--these rules contain extensive requirements for exposure to these substances.

History: 1954 ACS 61, Eff. Feb. 16, 1970; 1954 ACS 68, Eff. June 10, 1971; 1979 AC; 2003 MR 15, Eff. Aug. 19, 2003.

R 325.2414 Maximum allowable concentrations for substances C and D.

Rule 14. Table 2 reads as follows:

Table 2

	Substance	**MAC ppm**	**MAC mg/m^3**
	Cadmium (metal dust and soluble salts) (see R 325.51851 et seq.)*		
C	Cadmium oxide fume (as Cd) (see R 325.51851 et seq.*)		
	Calcium arsenate	---	1
	Calcium carbonate	Inert dust	
	Calcium oxide	---	5
	Camphor (synthetic)	2	---
	Carbaryl (Sevin®)	---	5
	Carbon black	---	3.5
	Carbon dioxide	5,000	9,000
S	Carbon disulfide	20	60
	Carbon monoxide	50	55
S,C	Carbon tetrachloride	10	65
	Cellulose (paper fiber)	Inert dust	
S	Chlordane	---	0.5

S	Chlorinated camphene	---	0.5
	Chlorinated diphenyl oxide	---	0.5
	Chlorine	1	3
	Chlorine dioxide	0.1	0.3
C	Chlorine trifluoride	0.1	0.4
C	Chloroacetaldehyde	1	3
	alpha-Chloroacetophenone (phenacylchloride)	0.05	0.3
	Chlorobenzene (monochlorobenzene)	75	350
	o-Chlorobenzylidene malononitrile (OCBM)	0.05	0.4
	Chlorobromomethane	200	1,050
	2-Chloro-1,3-butadiene, see Chloroprene		
S	Chlorodiphenyl (42% Chlorine)	---	1
S	Chlorodiphenyl (54% Chlorine)	---	0.5
	1-Chloro-2,3-epoxypropane, see Epichlorohydrin		
	2-Chloroethanol, see Ethylene chlorohydrin		
	Chloroethylene, see Vinyl chloride		
C	Chloroform (trichloromethane)	50	240
	1-Chloro-1-nitropropane	20	100
	Chloropicrin	0.1	0.7
S	Chloroprene (2-chloro-1,3-butadiene)	25	90
	Chromic acid and chromates (as $Cr0_3$)	---	0.1
	Chromium, sol. chromic & chromous salts (as Cr)	---	0.5
	Metal & insol. salts	---	1
	Coal tar pitch volatiles (benzene soluble fraction: anthracene, BaP, phenanthrene, acridine, chrysene, pyrene)	---	0.2
	Cobalt, metal fume & dust	---	0.1
	Coke oven emissions (see R 325.50101 et seq.*)		
	Copper fume	---	0.1
	Dusts and mists	---	1
	Corundum (Al_20_3)	Inert dust	
	Cotton dust (raw)	---	1
	Crag® herbicide	---	15
S	Cresol (all isomers)	5	22
	Crotonaldehyde	2	6
S	Cumene	50	245
S	Cyanide (as CN)	---	5
	Cyanogen	10	---
	Cyclohexane	300	1,050
	Cyclohexanol	50	200
	Cyclohexanone	50	200
	Cyclohexene	300	1,015
	Cyclopentadiene	75	200
	2,4-D	---	10
S	DDT (Dichlorodiphenyltrichloroethane)	---	1
	DDVP, see Dichlorvos		
S	Decaborane	0.05	0.3
S	Demeton®	---	0.1
	Diacetone alcohol (4-hydroxy-4-methyl-2-pentanone)	50	240
	1,2-Diainoethane, see Ethylenediamine		
	Diazomethane	0.2	0.4
	Diborane	0.1	0.1
S,C	2-Dibromoethane (ethylene dibromide)	25	190
	Dibutyl phosphate	1	5
	Dibutyl phthalate	---	5
C	Dichloroacetylene	0.1	0.4
C	o-Dichlorobenzene	50	300
	p-Dichlorobenzene	75	450

	Dichlorodifluoromethane	1,000	4,950
	1,3-Dichloro-5,5-dimethyl hydantoin	---	0.2
	1,1-Dichloroethane	100	400
	1,2-Dichloroethane	50	200
	1,2-Dichloroethylene	200	790
S,C	Dichloroethyl ether	15	90
	Dichloromethane, see Methylene chloride		
	Dichloromonofluoromethane	1,000	4,200
C	1,1-Dichloro-l-nitroethane	10	60
	1,2-Dichloropropane, see Propylene dichloride		
	Dichlorotetrafluoroethane	1,000	7,000
S	Dichlorvos (DDVP)	---	1
S	Dieldrin	---	0.25
	Diethyl	25	75
S	Diethylamino, ethanol	10	50
S,C	Diethylene triamine	10	42
	Diethyl ether, see Ethyl ether		
	Difluorodibromomethane	100	860
C	Diglycidyl ether (DGE)	0.5	2.8
	Dihydroxybenzene, see Hydroquinone		
	Diisobutyl ketone	50	290
S	Diisopropylamine	5	20
	Dimethoxymethane, see Methylal		
S	Dimethyl acetamide	10	35
	Dimethylamine	10	18
	Dimethylaminobenzene, see Xylidene		
S	Dimethylaniline (N-dimethylaniline)	5	25
	Dimethylbenzene, see Xylene		
	Dimethyl-1,2-dibromo-2,2-dichloroethyl phosphate (Dibrom®)	---	3
S	Dimethylformamide	10	30
	2,6-Dimethylheptanone, see Diisobutyl ketone		
S	1,1-Dimethylhydrazine	0.5	1
	Dimethylphthalate	---	5
S	Dimethylsulfate	1	5
S	Dinitrobenzene (all isomers)	---	1
S	Dinitro-o-cresol	---	0.2
S	Dinitrotoluene	---	1.5
S	Dioxane (diethylene dioxide)	100	360
	Diphenyl	0.2	1
	Diphenyl amine	---	10
	Diphenylmethane diisocyanate, see Methylene bisphenyl isocyanate (MDI)		
S	Dipropylene glycol methyl ether	100	600
	Di-sec,octyl phthalate (di-2-ethylhexylphthalate)	---	5

A, C, and S See R 325.2412.

* Caution--these rules contain extensive requirements for exposure to these substances.

History: 1954 ACS 61, Eff. Feb. 16, 1970; 1954 ACS 68, Eff. June 10, 1971; 1979 AC; 2003 MR 15, Eff. Aug. 19, 2003.

R 325.2415 Maximum allowable concentrations for substances E to H.

Rule 15. Table 3 reads as follows:

Table 3

		MAC	
Substance		**ppm**	**mg/m^3**
	Emery	Inert dust	
S	Endosulfan (Thiodan®)	---	0.1

S	Endrin	---	0.1
S	Epichlorohydrin	5	19
S	EPN	---	0.5
	1,2-Epoxypropane, see Propylene oxide		
	2,3-Epoxy-l-propanol, see Glycidol		
	Ethane	Inert gas	
	Ethanethiol, see Ethyl mercaptan		
	Ethanolamine	3	6
S	2-Ethoxyethanol	200	740
S	2-Ethoxyethylacetate (cellosolve acetate)	100	540
	Ethyl acetate	400	1,400
S	Ethyl acrylate	25	100
	Ethyl alcohol (ethanol)	1,000	1,900
	Ethylamine	10	18
	Ethyl sec-amyl ketone (5-methyl-3-heptanone)	25	130
	Ethyl benzene	100	435
	Ethyl bromide	200	890
	Ethyl butyl ketone (3-heptanone)	50	230
	Ethyl chloride	1,000	2,600
	Ethyl ether	400	1,200
	Ethyl formate	100	300
	Ethyl mercaptan	0.5	1
	Ethyl silicate	100	850
	Ethylene	Inert gas	
S	Ethylene chlorohydrin	5	16
	Ethylenediamine	10	25
	Ethylene dibromide, see 1,2-Dibromoethane		
	Ethylene dichloride, see 1,2-Dichloroethane		
S,C	Ethylene glycol dinitrate and/or Nitroglycerin	0.2	
	Ethylene glycol monomethyl ether acetate, see Methyl cellosolve acetate		
S	Ethyleneimine	0.5	1
	Ethylene oxide (see R 325.51151 et seq.*)		
	Ethylidine chloride, see 1,1-Dichloroethane		
S	N-Ethylmorpholine	20	94
	Ferbam	---	15
	Ferrovanadium dust	---	1
	Fibrous glass	Inert dust	
	Fluoride (as F)	---	2.5
	Fluorine	0.1	0.2
	Fluorotrichloromethane	1,000	5,600
C	Formaldehyde (see R 325.51451 et seq.*)		
	Formic acid	5	9
S	Furfural	5	20
	Furfuryl alcohol	50	200
	Gasoline (limits will be based on aromatic hydrocarbons in mixture)		
	Glycerine mist	Inert mist	
	Glycidol (2,3-epoxy-l-propanol)	50	150
	Glycol monoethyl ether, see 2-Ethoxyethanol		
	Graphite (synthetic)	Inert dust	
	Guthion®, see Azinphos-methyl		
	Gypsum	Inert dust	
	Hafniun	---	0.5
	Helium	Inert gas	
S	Heptachlor	---	0.5
	Heptane (n-heptane)	500	2,000
S	Hexachloroethane	1	10

S	Hexachloronaphthalene	---	0.2
	Hexane (n-hexane)	500	1,800
	2-Hexanone	100	410
	Hexone (methyl isobutyl ketone)	100	410
	sec-Rexyl acetate	50	300
S	Hydrazine	1	1.3
	Hydrogen	Inert gas	
	Hydrogen bromide	3	10
C	Hydrogen chloride	5	7
S	Hydrogen cyanide	10	11
	Hydrogen fluoride	3	2
	Hydrogen peroxide	1	1.4
	Hydrogen selenide	0.05	0.2
	Hydrogen sulfide	10	15
	Hydroquinone	---	2

A, C, and S See R 325.2412.
* Caution--these rules contain extensive requirements for exposure to these substances.

History: 1954 ACS 61, Eff. Feb. 16, 1970; 1954 ACS 68, Eff. June 10, 1971; 1979 AC; 2003 MR 15, Eff. Aug. 19, 2003.

R 325.2416 Maximum allowable concentrations for substances I to M.

Rule 16. Table 4 reads as follows:

Table 4

		MAC	
	Substance	**ppm**	**mg/m^3**
	Indene	*10*	*45*
	Indium and compounds (as In)	---	0.1
C	Iodine	0.1	1
	Iron oxide fume	---	10
	Iron salts, soluble (as Fe)	---	1
	Isoamyl acetate	100	525
	Isoamyl alcohol	100	360
	Isobutyl acetate	150	700
	Isobutyl alcohol	100	300
	Isophorone	25	140
	Isopropyl acetate	250	950
	Isopropyl alcohol	400	980
	Isopropylamine	5	12
	Isopropyl ether	500	2,100
	Isopropyl glycidyl ether (IGE)	50	240
	Kaolin	Inert dust	
	Ketene	0.5	0.9
	Lead	---	0.2
	Lead arsenate	---	0.15
	Limestone	Inert dust	
S	Lindane	---	0.5
	Lithium hydride	---	0.025
	L.P.G. (liquified petroleum gas)	1,000	1,800
	Magnesite	Inert dust	
	Magnesium oxide fume	---	15
S	Malathion	---	15
	Maleic anhydride	0.25	1
C	Manganese and compounds (as Mn)	---	5
	Marble	Inert dust	
S	Mercury	---	0.1
S	Mercury (organic compounds)	---	0.01
	Mesityl oxide	25	100

	Methane	Inert gas	
	Methanethiol, see Methyl mercaptan		
	Methoxychlor	---	15
	2-Methoxyethanol, see Methyl cellosolve		
	Methyl acetate	200	610
	Methyl acetylene (propyne)	1,000	1,650
	Methyl acetylene-propadiene mixture (MAPP)	1,000	1,800
S	Methyl acrylate	10	35
	Methylal (dimethoxymethane)	1,000	3,100
	Methyl alcohol (methanol)	200	260
	Methylamine	10	12
	Methyl amyl alcohol, see Methyl isobutyl carbinol		
	Methyl (n-amyl) ketone (2-heptanone)	100	465
S,C	Methyl bromide	20	80
	Methyl butyl ketone, see 2-Hexanone		
S	Methyl cellosolve	25	80
S	Methyl cellosolve acetate	25	120
C	Methyl chloride	100	210
	Methyl chloroform	350	1,900
	Methylcyclohexane	500	2,000
	Methylcyclohexanol	*100*	*470*
S	o-Methylcyclohexanone	100	460
	Methylenedianiline (MDA) (see R 325.51651 et seq.*)		
	Methyl ethyl ketone (MEK), see 2-Butanone		
	Methyl formate	100	250
S	Methyl iodide	5	28
	Methyl isoanyl ketone	100	475
S	Methyl isobutyl carbinol	25	100
	Methyl isobutyl ketone, see Hexone		
S	Methyl isocyanate	0.02	0.05
	Methyl mercaptan	0.5	1
	Methyl methacrylate	100	410
	Methyl propyl ketone, see 2-Pentanone		
C	Methyl silicate	5	30
C	alpha-Methyl styrene	100	480
C	Methylene bisphenyl isocyanate (MDI)	0.02	0.2
	Methylene chloride (dichloromethane) (see R 325.51651 et seq.*)		
	Molybdenum (soluble compounds)	---	5
	(insoluble compounds)	---	15
S	Monomethyl aniline	2	9
S,C	Monomethyl hydrazine	0.2	0.35
S	Morpholine	20	70

A, C, and S See R 325.2412.

* Caution--these rules contain extensive requirements for exposure to these substances.

History: 1954 ACS 61, Eff. Feb. 16, 1970; 1954 ACS 68, Eff. June 10, 1971; 1979 AC; 2003 MR 15, Eff. Aug. 19, 2003.

R 325.2417 Maximum allowable concentrations for substances N to P.

Rule 17. Table 5 reads as follows:

Table 5

	Substance	**MAC ppm**	**MAC mg/m^3**
	Naphtha (coal tar)	100	400
	Naphtha (petroleum)(MAC will be based on aromatic hydrocarbons in mixture)		
	Naphthalene	10	50
A	beta-Naphthylamine	---	

	Neon	Inert gas	
	Nickel carbonyl	0.001	0.007
	Nickel, metal and soluble compounds (as Ni)	---	1
S	Nicotine	---	0.5
	Nitric acid	2	5
	Nitric oxide	25	30
S	p-Nitroaniline	1	6
S	Nitrobenzene	1	5
S	p-Nitrochlorobenzene	---	1
	Nitroethane	100	310
	Nitrogen	Inert gas	
	Nitrogen dioxide	5	9
	Nitrogen trifluoride	10	29
S	Nitroglycerin	0.2	2
	Nitromethane	100	250
	1-Nitropropane	25	90
	2-Nitropropane	25	90
S,A	N-Nitrosodimethylamine (dimethylnitrosomine)	---	---
S	Nitrotoluene	5	30
	Nitrotrichloromethane, see Chloropicrin		
	Nitrous oxide	Inert gas	
S	Octachloronaphthalene	---	0.1
	Octane	400	1,900
	Oil mist, particulate	---	5
	Oil mist, vapor (MAC will be based on aromatic hydrocarbons in mixture)		
	Osmium tetroxide	---	0.002
	Oxalic acid	---	1
	Oxygen difluoride	0.05	0.1
	Ozone	0.1	0.2
S	Paraquat	---	0.5
S	Parathion	---	0.1
	Pentaborane	0.005	0.01
S	Pentachloronaphthalene	---	0.5
S	Pentachlorophenol	---	0.5
	Pentaerythritol	Inert particulate	
	Pentane	500	1,500
	2-Pentanone	200	700
	Perchloroethylene	100	670
	Perchloromethyl mercaptan	0.1	0.8
	Perchloryl fluoride	3	13.5
	Petroleum distillates (naphtha)(MAC will be based on aromatic hydrocarbons in mixture)		
S	Phenol	5	19
S	p-Phenylene diamine	---	0.1
	Phenyl ether (vapor)	1	7
	Phenyl ether-biphenyl mixture (vapor)	1	7
	Phenylethylene, see Styrene		
	Phenyl glycidyl ether (PGE)	10	60
S	Phenylhydrazine	5	22
S	Phosdrin (Mevinphos®)	---	0.1
	Phosgene (carbonyl chloride)	0.1	0.4
	Phosphine	0.3	0.4
	Phosphoric acid	---	1
	Phosphorus (yellow)	---	0.1
	Phosphorus pentachloride	---	1
	Phosphorus pentasulfide	---	1

	Phosphorus trichloride	0.5	3
	Phthalic anhydride	2	12
S	Picric acid	---	0.1
	Pival® (2-pivalyl-1,3-indandione)	---	0.1
	Plaster of Paris	*Inert dust*	
	Platinim, soluble salts (as Pt)	---	0.002
	Polytetrafluoroethylene decomposition products, see Teflon® decomposition products		
	Propane	Inert gas	
S	Propargyl alcohol	1	---
A	beta-Propiolactone	---	---
	n-Propyl acetate	200	840
	Propyl alcohol	200	500
	n-Propyl nitrate	25	110
	Propylene dichloride	75	350
S	Propylene imine	2	5
	Propylene oxide	100	240
	Propyne, see Methyl acetylene		
	Pyrethrum	---	5
	Pyridine	5	15

A, C, and S See R 325.2412.

History: 1954 ACS 61, Eff. Feb. 16, 1970; 1954 ACS 68, Eff. June 10, 1971; 1979 AC; 2003 MR 15, Eff. Aug. 19, 2003.

R 325.2418 Maximum allowable concentrations for substances Q to Z.

Rule 18. Table 6 reads as follows:

Table 6

		MAC	
	Substance	**ppm**	**mg/m³**
	Quinone	0.1	0.4
S	*RDX*	---	*1.5*
	Rhodium, metal fume, dusts, and insoluble compounds (as Rh)	---	0.1
	Rhodium, soluble compounds (as Rh)	---	0.001
	Ronnel	---	10
	Rotenone (commercial)	---	5
	Rouge	Inert dust	
	Selenium compounds (as Se)	---	0.2
	Selenium hexafluoride	0.05	0.4
	Silicon carbide	Inert dust	
	Silver, metal and soluble compounds	---	0.01
S	Sodium fluoroacetate (1080)	---	0.05
	Sodium hydroxide	---	2
	Starch	Inert dust	
	Stibine	0.1	0.5
	Stoddard solvent	200	1,150
	Strychnine	---	0.15
C	Styrene monomer (phenylethylene)	100	420
	Sucrose	Inert dust	
	Sulfur dioxide	5	13
	Sulfur hexafluoride	1,000	6,000
	Sulfuric acid	---	1
	Sulfur monochloride	1	6
	Sulfur pentafluoride	0.025	0.25
	Sulfuryl fluoride	5	20
	Systox, see Demeton®		
	2,4,5T	---	10
	Tantalum	---	5

S	TEDP	---	0.2
	Teflon® decomposition products (maintain minimal air concentration)		
	Tellurium	---	0.1
	Tellurium hexafluoride	0.02	0.2
S	TEPP	---	0.05
C	Terphenyls	1	9
	1,1,1,2-Tetrachloro-2,2-difluoroethane	500	4,170
	1,1,2,2-Tetrachloro-1,2-difluoroethane	500	4,170
S	1,1,2,2-Tetrachloroethane	5	35
	Tetrachloroethylene, see Perchloroethylene		
	Tetrachloromethane, see Carbon tetrachloride		
S	Tetrachloronaphthalene	---	2
S	Tetraethyl lead (as Pb)	---	0.075
	Tetrahydrofuran	200	590
S	Tetramethyl lead (THL) (as Pb)	---	0.150
S	Tetramethyl succinonitrile	0.5	3
	Tetranitromethane	1	8
S	Tetryl (2,4,6-trinitrophenylmethylnitramine)	---	1.5
S	Thallium, soluble compounds (as T1)	---	0.1
	Thiram	---	5
	Tin (inorganic compounds, except SnH_4 and SnO_2)	---	2
	(organic compounds)	---	0.1
	Tin oxide	Inert particulate	
	Titanium dioxide	Inert particulate	
	Toluene (toluol)	200	750
C	Toluene-2,4-diisocyanate	0.02	0.14
S	o-Toluidine	5	22
	Toxaphene, see Chlorinated camphene		
	Tributyl phosphate	---	5
	1,1,1-Trichloroethane, see Methyl chloroform		
S	1,1,2-Trichloroethane	10	45
	Trichloroethylene	100	535
	Trichloromethane, see Chloroform		
S	Trichloronaphthalene	---	5
	1,2,3-Trichloropropane	50	300
	1,1,2-Trichloro-1,2,2-trifluoroethane	1,000	7,600
	Triethylamine	25	100
	Trifluoromonobromomethane	1,000	6,100
	Trimethyl benzene	25	120
	2,4,6-Trinitrophenol, see Picric acid		
	2,4,6-Trinitrophenylmethylnitramine, see Tetryl		
S	Trinitrotoluene	---	1.5
	Triorthocresyl phosphate	---	0.1
	Triphenyl phosphate	---	3
	Tungsten and compounds (as W)		
	Insoluble	---	5
	Soluble	---	1
	Turpentine	100	560
	Uranium (natural)		
	soluble & insoluble compounds (as U)	---	0.2
C	Vanadium (V_2O_5 dust)	---	0.5
	(V_2O_5 fume)	---	0.1
	Vinyl benzene, see Styrene		
C	Vinyl chloride (see R 325.51401 et seq.*)		
	Vinyl cyanide, see Acrylonitrile		
	Vinyl toluene	100	480

	Warfarin	---	0.1
	Xylene (xylol)	100	435
S	Xylidine	5	25
	Yttrium	---	1
	Zinc chloride fume	---	1
	Zinc oxide fume	---	5
	Zirconium compounds (as Zr)	---	5

A, C, and S See R 325.2412.
* Caution--these rules contain extensive requirements for exposure to these substances.

History: 1954 ACS 61, Eff. Feb. 16, 1970; 1954 ACS 68, Eff. June 10, 1971; 1979 AC; 2003 MR 15, Eff. Aug. 19, 2003.

R 325.2419 Maximum allowable concentrations for mineral dusts.

Rule 19. Table 7 reads as follows:

Table 7
Mineral Dusts

Substance	**MAC (mppcf)**
Silica Crystalline ***** Quartz	$MAC = \frac{250}{\% SiO_2+5}$
Cristobalite	MAC same as quartz
Amorphous, including natural diatomaceous earth	20
Silicates (less than 1% crystalline silica) Asbestos, all types (see asbestos in construction R 325.51301 et seq.)	
Mica	20
Portland cement	50
Soapstone	20
Talc (non-asbestiform)	20
Talc (fibrous) (see asbestos in construction R 325.51301 et seq.)	
Tremolite (see asbestos in construction R 325.51301 et seq.)	
Graphite (natural)	15
Inert or nuisance particles ******	50 of total dust less than 1% SiO_2 (or 15 mg/m^3, whichever is the smaller)

***** The percentage of crystalline silica, SiO_2, in the formula is the amount determined from airborne samples.
****** The following are some examples of inert or nuisance particulates when toxic impurities are not present; e.g. quartz less than 1%.

Alundum ($A1_2O_3$)	Gypsum	Rouge

Calcium carbonate	Limestone	Silicon carbide
Cellulose	Magnesite	Starch
Corundum ($A1_20_3$)	Marble	Sucrose
Emery	Pentaerythritol	Tin oxide
Glycerine mist	Plaster of Paris	Titanium dioxide
Graphite (synthetic)	Portland cement	Vegetable oil mists (except castor, cashew nut, or similar irritant oils)

History: 1954 ACS 61, Eff. Feb. 16, 1970; 1954 ACS 68, Eff. June 10, 1971; 1979 AC; 2003 MR 15, Eff. Aug. 19, 2003.

R 325.2421 Continuous, broad-band noise.

Rule 21. (1) The following are maximum permissible levels of continuous, broad-band noise based on daily exposure time in places of employment:

Permitted Daily Exposure Time, Hours	Maximum Permissible Noise Level, dBA, Slow Response
8	90
6	92
4	95
3	97
2	100
1 1/2	102
1	105
3/4	107
1/2	110
1/4	115

(2) If a noise level is between 2 listed maximum permissible noise levels in subrule (1) of this rule, then chart A shall be used to determine the permitted daily exposure time. In applying the chart, measured noise levels will be taken to the nearest whole number.

Chart A

NOISE EXPOSURE CHART

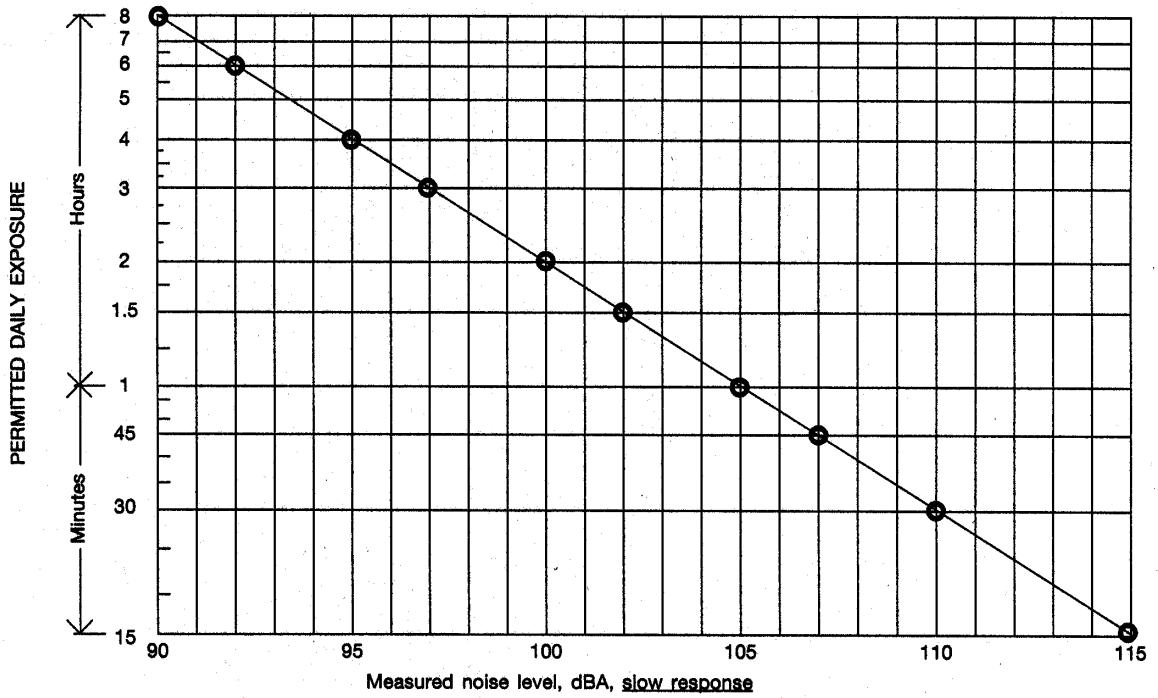

(3) If airborne noise levels and exposure times exceed the values in subrule (1) or (2) of this rule, then noise control measures or reduction of exposure time shall be provided or auditory protective equipment shall be provided by the employer and used by the employee.
(4) If the daily noise exposure is composed of 2 or more periods of noise exposure of different levels, each period of noise exposure shall be determined by dividing the actual exposure time in minutes at the measured noise level by the permitted exposure time in minutes at that measured noise level pursuant to subrule (1) of this rule. The noise exposure for the periods shall be totaled. The total noise exposure shall not exceed the unit number 1.
If an actual exposure time is measured at a noise level less than 90 dBA, then that period of noise exposure shall be unlimited or infinity (∞).
(5) The following are examples of the use of the formula in accordance with subrule (4) of this rule:

$N = \underline{t_1} + \underline{t_2} + \underline{t_3} +$ N = total noise exposure
T_1 T_2 T_3 t_1, t_2, t_3 . . = actual exposure times in minutes, at different noise levels.
T_1, T_2, T_3 . . = permitted exposure times in minutes, at different noise levels.

Example #1
5 Hr. = 300 Min. Exposure @ 83 dBA Permissible Time = ∞
2 Hr. = 120 Min. Exposure @ 95 dBA Permissible Time = 4 Hr. = 240 Min.
1 Hr. = 60 Min. Exposure @ 97 dBA Permissible Time = 3 Hr. = 180 Min.
$\underline{t_1} + \underline{t_2} + \underline{t_3}$ = N: $\underline{300} + \underline{120} + \underline{60} = 0 + .5 + .33 = .83$
T_1 T_2 T_3 ∞ 240 180
Since N does not exceed $\underline{1}$ the exposure is less than the permissible limit.

Example #2
1 Hr. = 60 Min Exposure @ 87 dBA Permissible Time = ∞
3 Hr. = 180 Min. Exposure @ 90 dBA Permissible Time = 8 Hr. = 480 Min.

3 Hr. = 180 Min. Exposure @ 95 dBA Permissible Time = 4 Hr. = 240 Min.
1 Hr. = 60 Min. Exposure @ 100 dBA Permissible Time = 2 Hr. = 120 Min.
$\frac{t_1}{T_1} + \frac{t_2}{T_2} + \frac{t_3}{T_3} = N$: $\frac{60}{\infty} + \frac{180}{480} + \frac{180}{240} + \frac{60}{120} = 0 + .38 + .75 + .5 = 1.63$
Since N is greater than 1 the exposure exceeds the permissible limit.

(6) A sound level meter shall be used with the "A" network, slow response to compare airborne continuous noise levels with the maximum permissible noise levels.
History: 1954 ACS 61, Eff. Feb. 16, 1970; 1954 ACS 68, Eff. June 10, 1971; 1979 AC; 2003 MR 15, Eff. Aug. 19, 2003.

R 325.2422 Impulse noise.
Rule 22. The maximum permissible level for impulse noise shall be 140 dB as measured with a cathode-ray oscilloscope system or with other equipment such as the impact noise meter capable of indicating the maximum-instantaneous peak noise level.
History: 1954 ACS 61, Eff. Feb. 16, 1970; 1979 AC; 2003 MR 15, Eff. Aug. 19, 2003.

R 325.2424 Illumination.
Rule 24. The level of illumination shall be adequate as determined by the director for the performance of the task.
History: 1954 ACS 61, Eff. Feb. 16, 1970; 1979 AC; 2003 MR 15, Eff. Aug. 19, 2003.

R 325.2429 Control methods for enclosures and controlled processes.
Rule 29. (1) An enclosure shall be provided at a stationary source unless the omission of the enclosure does not impair control.
(2) A controlled process shall be designed and regulated to prevent the creation of a hazard to health or life. If the director determines that there may be an immediate danger to health or life due to the failure of the process design or regulatory device, then he or she may require that the process fail-safe in such manner to avert the hazard.
History: 1954 ACS 61, Eff. Feb. 16, 1970; 1979 AC; 2003 MR 15, Eff. Aug. 19, 2003.

R 325.2430 Rescinded.
History: 1954 ACS 61, Eff. Feb. 16, 1970; 1954 ACS 68, Eff. June 10, 1971; 1979 AC; rescinded 1993 MR 10, Eff. Nov. 2, 1993.

R 325.2431 Inert gas or foam systems.
Rule 31. If an inert gas or foam system is provided in an occupied area for the prevention or extinguishment of fire or explosion, then the affected area shall be conspicuously posted to call attention to the potential creation of a nonrespirable atmosphere. The actuating of an audible and visible alarm before the system is activated shall be provided. The system shall incorporate a sufficient time-delay to permit the egress of persons within the affected area. After the activation of the system, an audible and visible warning that a nonrespirable atmosphere has been created within the area shall continue until the nonrespirable atmosphere has been purged or diluted with air to safe breathing levels.
History: 1954 ACS 61, Eff. Feb. 16, 1970; 1979 AC; 2003 MR 15, Eff. Aug. 19, 2003.

R 325.2434 Supply ventilation systems.
Rule 34. (1) A supply ventilation system shall be provided to ensure a flow of air into the working environment to replace the volume of air exhausted.
(2) A mechanical air supply system shall be provided if its absence will result in building negative pressures sufficient to cause back-drafting of vents from fuel-fired equipment or ineffective control.
(3) Mechanical air supply volumes shall be heated to maintain a minimum air temperature of 65 degrees Fahrenheit measured at the point of air discharge to the space. Exceptions to this requirement are refrigerated storage rooms, special process rooms, and similar locations where lower air temperatures are essential to the preservation of the product or service, or, if in the opinion of the director, a lower air temperature will not be harmful to the health of the persons affected.
History: 1954 ACS 61, Eff. Feb. 16, 1970; 1979 AC; 2003 MR 15, Eff. Aug. 19, 2003.

R 325.2435 Direct-fired air heaters.
Rule 35. (1) A direct-fired air heater, wherein combustion products are released in the supply air stream, may be installed in buildings of industrial occupancy, garages, laundries, and commercial kitchens. They shall not be installed in offices, schools, hospitals, and places of public assembly.

(2) A direct-fired air heater shall have an inlet duct connected directly to the out-of-doors. Room air shall not be circulated across the burner.
(3) A direct-fired air heater shall deliver air which contains not more than 10 ppm of carbon monoxide and is free from odors of combustion products. Permissible concentrations of other contaminants in the delivered air may be established by the director pursuant to their MAC and the degree of exposure to a person.
(4) The air volume supplied to the building by a direct-fired air heater shall not exceed 110% of the total air volume exhausted. The director may require interlocking of a heater control system with an exhaust ventilation system if necessary to ensure that the exhaust systems are operating.
(5) A direct-fired air heater shall have both of the following:
(a) A pre-ignition purge of fresh air.
(b) A positive fuel supply closure in the event of fuel supply failure, ignition failure, flame failure, power failure or interruption, or air flow reduction below 50% of its rated capacity.
History: 1954 ACS 61, Eff. Feb. 16, 1970; 1979 AC; 2003 MR 15, Eff. Aug. 19, 2003.

R 325.2436 Exhaust ventilation systems.
Rule 36. The minimum rate of exhaust ventilation for places of manufacturing, processing, assembling, maintenance and repair, or storage of material shall be 1 cubic foot of air per minute per square foot of floor area. This amount of exhaust ventilation may be provided by local exhaust, general exhaust, or both. The director may permit a variance if contaminant control can be accomplished at a lesser rate of ventilation.
History: 1954 ACS 61, Eff. Feb. 16, 1970; 1979 AC; 2003 MR 15, Eff. Aug. 19, 2003.

R 325.2437 Local exhaust ventilation.
Rule 37. (1) Local exhaust ventilation shall be provided at all stationary sources. The director may allow a variance from this requirement if control is accomplished with general ventilation.
(2) If a local exhaust system is used, then the exhaust air volume shall create an indraft air volume at an enclosure, hood, duct, or fan sufficient to control the contaminant.
(3) A local exhaust system shall be designed to capture and control the contaminant. Distribution of exhaust air between various exhaust points may be accomplished by balanced duct design. If balancing gates are used, then they shall be locked permanently in place after final adjustment.
(4) The design and construction of a local exhaust ventilation system shall be adequate for the contaminant and conditions of service. A listing of practical ventilation texts and references shall be available from the director upon request. Technical information and experience regarding specific contaminants and control measures may be obtained from the director.
History: 1954 ACS 61, Eff. Feb. 16, 1970; 1979 AC; 2003 MR 15, Eff. Aug. 19, 2003.

R 325.2438 General ventilation system.
Rule 38. A general ventilation system may be used for contaminant control. The ventilation air volume shall be sufficient to dilute the airborne contaminant to levels not exceeding the MAC.
History: 1954 ACS 61, Eff. Feb. 16, 1970; 1979 AC; 2003 MR 15, Eff. Aug. 19, 2003.

R 325.2439 Exhaust system discharge locations.
Rule 39. The discharge locations of local exhaust or general exhaust systems shall not permit exhausted air to re-enter a workroom or other buildings directly, or indirectly, through air supply systems without substantial dilution.
History: 1954 ACS 61, Eff. Feb. 16, 1970; 1979 AC; 2003 MR 15, Eff. Aug. 19, 2003.

R 325.2440 Recirculation of air from exhaust systems.
Rule 40. (1) The recirculation of air containing a contaminant whose MAC is at least 1000 ppm, 15 mg/m^3, or 50 mppcf, shall be permitted if the exhaust ventilation system is equipped with an air cleaning device capable of reducing the contaminant concentrations to 10% or less of their MAC in the returned air.
(2) The director may allow the recirculation of air containing a contaminant whose MAC is less than 1000 ppm, 15 mg/m^3 or 50 mppcf, if the toxicity of the contaminant and the degree of air cleaning to be achieved create an environment which will not impair the health of the workers, and if the contaminant concentrations in the returned air do not exceed 10% of its MAC.
(3) A recirculation system shall include an alternate air duct connection to discharge the returned air outside of the building if necessary to protect the workers' health.
History: 1954 ACS 61, Eff. Feb. 16, 1970; 1979 AC; 2003 MR 15, Eff. Aug. 19, 2003.

R 325.2441 Air pollution control.

Rule 41. A local exhaust and general exhaust ventilation system shall comply with rules adopted by the Michigan Department of Environmental Quality, being R 336.1101 to R 336.1910.
History: 1954 ACS 61, Eff. Feb. 16, 1970; 1979 AC; 2003 MR 15, Eff. Aug. 19, 2003.

R 325.2442 Respiratory protective equipment; selection and use.
Rule 42. (1) Respiratory protective equipment for the safeguarding of the workers' health shall be provided by the employer if other methods do not control the contaminants.
(2) Respiratory protective equipment for the safeguarding of a worker's health may be used in place of other control measures in intermittent or temporary work situations.
(3) Respiratory protective equipment shall be of a type approved for protection against the contaminant and degree of exposure to be encountered. A listing of approved types of respiratory protective equipment shall be available from the director.
(4) Responsibility for equipment selection, issuance, use, training, and maintenance shall be vested in a qualified individual who shall have sufficient knowledge of the subject.
(5) A worker shall be trained in the use of the equipment and shall have an opportunity to become familiar with it, have it fitted properly, and test its facepiece to face seal. If a worker needs to wear corrective lenses, then the facepiece and lenses shall be fitted by a qualified individual.
(6) A worker shall use the equipment in accordance with instructions, shall report any malfunctioning of the equipment to the person responsible, and shall guard the equipment against damage.
(7) If the equipment is to be used in an atmosphere immediately dangerous to life or health, then the worker shall use it in normal air for a reasonable familiarity period.
(8) Emergency equipment shall be readily accessible at all times and its location shall be clearly marked.
History: 1954 ACS 61, Eff. Feb. 16, 1970; 1954 ACS 68, Eff. June 10, 1971; 1979 AC; 2003 MR 15, Eff. Aug. 19, 2003.

R 325.2442a Respiratory protective equipment; maintenance.
Rule 42a. (1) Respiratory protective equipment shall be maintained in clean and effective condition.
(2) Routinely used equipment shall be cleaned, inspected, and sanitized as frequently as necessary to ensure that proper protection is provided for the wearer.
(3) Emergency equipment that is not routinely used shall be inspected, cleaned, and sanitized after each use and inspected at least monthly to ensure that it is in effective working condition. A record shall be kept of inspection dates and findings.
(4) Equipment inspection shall include a check of the tightness of connections and the proper functioning of all parts.
(5) Replacement or repairs shall be made by trained persons with parts designated for the specific equipment. Reducing valves or regulators shall be returned to the manufacturer or to a trained technician for adjustment or repair.
(6) Equipment shall be stored to protect against dust, sunlight, heat, extreme cold, excessive moisture, or damaging chemicals.
History: 1954 ACS 68, Eff. June 10, 1971; 1979 AC; 2003 MR 15, Eff. Aug. 19, 2003.

R 325.2442b Respiratory protective equipment; types for certain hazards.
Rule 42b. The following equipment shall be used in any of the following hazards:

HAZARD	REQUIRED EQUIPMENT
Oxygen deficiency	Hose mask with blower Self-contained breathing apparatus
Gas vapor, particulate contaminants Atmospheres immediately dangerous to life or health Atmospheres not immediately dangerous to life or health	 Hose mask with blower Self-contained breathing apparatus Self-rescue mouthpiece respirator (for escape only Air-line respirator Air-line abrasive blasting respirator (for escape only) Gas mask with canister or with canister and filter Hose mask with blower Respirator with chemical cartridge or filter or both

History: 1954 ACS 68, Eff. June 10, 1971; 1979 AC; 2003 MR 15, Eff. Aug. 19, 2003.

R 325.2442c Respiratory protective equipment; supplies and components.
Rule 42c. (1) Compressed or liquid oxygen used with respiratory protective equipment shall be of high purity. Compressed oxygen shall not be used in supplied-air respirators or in open-circuit self-contained breathing apparatus that have previously used compressed air.
(2) Air may be supplied to equipment from cylinders or air compressors with proper pressure regulation and control. Air shall contain 19-23% oxygen and not more than 20 ppm carbon monoxide and 5 mg/m^3 oil mist.
(3) A compressor or compressor air intake shall be situated so as to prevent entry of contaminants into the system in amounts which may be injurious to the health of an exposed person.
(4) An oil lubricated compressor shall incorporate suitable inline air purifying sorbents and filters, temperature regulators, and high-temperature cut-off to assure breathing air quality. An oil lubricated compressor shall not use vegetable oil lubricants.
(5) An air-line coupling or connector shall be incompatible with outlets for other gas systems to prevent connection with nonrespirable gases or oxygen.
(6) A self-contained breathing apparatus and universal type gas mask shall incorporate an audible or visible alarm or window to indicate impending failure of the device to provide respirable air. It is recommended that warning be given when 20-25% of rated service time remains.
History: 1954 ACS 68, Eff. June 10, 1971; 1979 AC; 2003 MR 15, Eff. Aug. 19, 2003.

R 325.2443 Variances.
Rule 43. Variances as provided in R 325.2436 and R 325.2437(1) may be granted by the director upon written request. Variances granted by the director shall be in writing and shall consider the potential health hazard and the control measures to be employed.
History: 1954 ACS 68, Eff. June 10, 1971; 1979 AC; 2003 MR 15, Eff. Aug. 19, 2003.

R 325.2444 Hearing procedures.
Rule 44. (1) The director shall serve a written notice upon an employer alleged to be in violation of these rules. The notice shall describe the alleged violation and set a date, time, and place for a hearing to determine whether a violation exists. The notice shall be delivered at least 15 days before the hearing date.
(2) Evidence and testimony may be introduced at the hearing and all interested parties shall be given the full opportunity to present evidence and to cross-examine witnesses.
(3) If a violation is found to exist, the director shall issue an order directing the person, firm, or corporation to correct the violation before a specified correction date. The correction date shall be established with consideration to the health hazard involved and the difficulty of eliminating the violation.
(4) At the time of the hearing, or within 30 days after receipt of an order from the director, the person, firm, or corporation may request an extension of the correction date. The director may grant an extension of the correction date, with consideration to the health hazard and the difficulty of correction, for a reasonable time if it is shown that the violation can and will be corrected before the extended correction date.
(5) If a violation is not eliminated within the time specified, then the director shall issue a final order directing the person, firm, or corporation to cease the operation of the source that is in violation.
History: 1954 ACS 68, Eff. June 10, 1971; 1979 AC; 2003 MR 15, Eff. Aug. 19, 2003.

R 325.2445 Emergency procedure.
Rule 45. If the director knows there is an immediate and serious hazard from exposure to a contaminant and he or she believes that a delay of 15 days would be prejudicial to the health or life of exposed persons, then the director shall notify the employer by written notice to discontinue immediately the exposure to the contaminant. Within 15 days the director shall provide the employer the opportunity to be heard and to present any proof that exposure to the contaminant does not constitute a danger to the health or life of the exposed persons.
History: 1954 ACS 68, Eff. June 10, 1971; 1979 AC; 2003 MR 15, Eff. Aug. 19, 2003.

R 325.2446 Appeals.
Rule 46. An employer aggrieved by a decision of the director may appeal the decision pursuant to sections 101 to 106 of 1969 PA 306, MCL 24.301 to 24.306.
History: 1954 ACS 68, Eff. June 10, 1971; 1979 AC; 2003 MR 15, Eff. Aug. 19, 2003.

R 325.2447 Amendments; revisions.
Rule 47. (1) If the director has knowledge that rule revision is required for the prevention of occupational disease or significant physiological disturbance, or after consideration of a request by any person, he may proceed to amend these rules in accordance with the administrative procedures act.
(2) If the director believes that there is a significant hazard to the health of exposed persons, he may proceed to amend these rules and provide for the immediate effect of the amendment in accordance with the administrative procedures act.
History: 1954 ACS 68, Eff. June 10, 1971; 1979 AC; 2003 MR 15, Eff. Aug. 19, 2003.

R 325.2448 Rescission.
Rule 48. The rules entitled "Basic Guides for Control of Exposure to Atmospheric Contaminants in Places of Employment," being R 325.1351 to R 325.1355 of the Michigan Administrative Code and appearing on pages 2592 to 2599 of the 1962 Annual Supplement to the Code, are rescinded.
History: 1954 ACS 68, Eff. June 10, 1971; 1979 AC; 2003 MR 15, Eff. Aug. 19, 2003.

DEPARTMENT OF AGRICULTURE

FOOD SERVICE SANITATION

R 325.2501
Source: 1997 AACS.

R 325.2502
Source: 1997 AACS.

R 325.2503
Source: 1997 AACS.

R 325.2504
Source: 1997 AACS.

R 325.2505
Source: 1997 AACS.

DEPARTMENT OF COMMUNITY HEALTH

OFFICE OF THE DIRECTOR

MERCURY LEVELS IN FISH FROM MICHIGAN WATERS

R 325.2601
Source: 1997 AACS.

R 325.2602
Source: 1997 AACS.

R 325.2603
Source: 1997 AACS.

R 325.2604
Source: 1997 AACS.

R 325.2605
Source: 1997 AACS.

DEPARTMENT OF STATE POLICE

SPECIAL OPERATIONS DIVISION

TESTS FOR BREATH ALCOHOL

R 325.2651 Definitions.
Rule 1. (1) As used in these rules:
(a) "Acts" means 1945 PA 327, MCL 259.190, 1949 PA 300, MCL 257.625a, 1993 PA 354, MCL 462.359, 1994 PA 451, MCL 324.80181, MCL 324.81136, AND MCL 324.82137.
(b) "Class I operator" means a person who is trained to administer a preliminary breath alcohol analysis on a preliminary breath alcohol test instrument specified by the department.
(c) "Class II operator" means a person who is certified by the department to administer an evidential breath alcohol analysis on an evidential breath alcohol test instrument specified by the department.
(d) "Class IIIA operator" means a person who is certified by the department to do all of the following:
(i) Administer an evidential breath alcohol analysis on an evidential breath alcohol test instrument specified by the department.
(ii) Administer a preliminary breath alcohol analysis on a preliminary breath alcohol test instrument specified by the department.
(iii) Verify and calibrate, as required, preliminary breath alcohol test instruments.
(iv) Train personnel in the use of preliminary breath alcohol test instruments.
(e) "Class IIIB operator" means a person who is certified by the department to do both of the following:
(i) Administer an evidential breath alcohol analysis on an evidential breath alcohol test instrument specified by the department.
(ii) Provide service on an evidential breath alcohol test instrument as specified by the department.
(f) "Class IV operator" means a person who is certified by the department to do all of the following:
(i) Administer an evidential breath alcohol analysis on an evidential breath alcohol test instrument specified by the department.
(ii) Administer a preliminary breath alcohol analysis on a preliminary breath alcohol test instrument specified by the department.
(iii) Verify, calibrate, and service, as required, evidential and preliminary breath alcohol test instruments.
(iv) Train class I, class II, class IIIA, and class IIIB operators in the use of evidential or preliminary breath alcohol test instruments.
(g) "Department" means the department of state police.
(h) "Evidential breath alcohol analysis" means chemical analysis of an essentially alveolar breath sample that indicates a specific result in grams of alcohol per 210 liters of breath.
(i) "Evidential breath alcohol test instrument" means an evidential breath testing device that indicates a specific result in grams of alcohol per 210 liters of breath.
(j) "Preliminary breath alcohol analysis" means chemical analysis of essentially alveolar breath samples that indicates the presence or absence of alcohol in a person's blood.
(k) "Preliminary breath alcohol test instrument" means a breath alcohol screening device that indicates the presence or absence of alcohol in a person's blood.
(2) Terms used in the acts have the same meanings when used in these rules.
History: 1954 ACS 78, Eff. Feb. 28, 1974; 1979 AC; 1984 MR 3, Eff. Apr. 7, 1984; 1988 MR 8, Eff. Aug. 31, 1988; 1992 MR 3, Eff. Apr. 7, 1992; 1994 MR 12, Eff. Dec. 28, 1994; 2003 MR 18, Eff. Sept. 30, 2003.

R 325.2652
Source: 1994 AACS.

R 325.2653 Equipment accuracy.
Rule 3. (1) An evidential breath alcohol test instrument shall be verified for accuracy at least once during each calendar week, or more frequently as the department may require, by a class II, class IIIA, or class IIIB operator. The test for accuracy shall be made in a prescribed manner using a standard alcohol solution that is approved by the department. For the instrument to meet the requirements for accuracy, a test result of .076 to .084, inclusive, shall be obtained when using a controlled device that delivers an alcohol vapor concentration of .080 grams of alcohol per 210 liters of vapor. Other vapor concentrations shall show proportionally accurate results.
(2) A preliminary breath alcohol test instrument shall be verified for accuracy at least monthly, or more frequently as the department may require, by a class IIIA or class IV operator. The test for accuracy shall be made in a prescribed manner using a standard alcohol solution that is approved by the department. For the instrument to meet the requirements for accuracy, a test result of .076 to .084, inclusive, shall be obtained when using a controlled device that delivers an alcohol

vapor concentration of .080 grams of alcohol per 210 liters of vapor.
(3) Approved evidential breath alcohol test instruments shall be inspected, verified for accuracy, and certified as to their proper working order by a certified class IV operator or the instrument manufacturer's authorized representatives approved by the department within 120 days, inclusive, of the previous inspection.
History: 1954 ACS 78, Eff. Feb. 28, 1974; 1979 AC; 1984 MR 3, Eff. Apr. 7, 1984; 1988 MR 8, Eff. Aug. 31, 1988; 1992 MR 3, Eff. Apr. 7, 1992; 1994 MR 12, Eff. Dec. 28, 1994; 2003 MR 18, Eff. Sept. 30, 2003.

R 325.2654
Source: 1992 AACS.

R 325.2655 Techniques and procedures.
Rule 5. (1) A procedure that is used in conjunction with evidential breath alcohol analysis shall be approved by the department and shall be in compliance with all of the following provisions:
(a) Evidential breath alcohol test instruments shall be operated only by class II, class IIIA, class IIIB, and class IV operators.
(b) All analyses shall be conducted using the department-approved procedures and report forms as required.
(c) Prescribed records of operation, analyses, and results shall be maintained at the instrument location and copies shall be forwarded to the department as required.
(d) The department shall test samples from each lot of ampoules of chemical solution used in the state in conjunction with evidential breath alcohol test instruments. The department shall certify for use those lots of ampoules that are found to be proper in chemical composition.
(e) A person may be administered a breath alcohol analysis on an evidential breath alcohol test instrument only after being observed for 15 minutes by the operator before collection of the breath sample, during which period the person shall not have smoked, regurgitated, or placed anything in his or her mouth, except for the mouthpiece associated with the performance of the test.
(f) A second breath alcohol analysis shall be requested from the person being tested and administered, unless the person refuses to give the second sample or a substance is found in the person's mouth subsequent to the first test that could interfere with the test result. Obtaining the first sample is sufficient to meet the requirements for evidentiary purposes prescribed in 1949 PA 300, MCL 257.625c. The purpose of obtaining a second sample result is to confirm the result of the first sample. A second sample result shall not vary from the first sample result by more than the following values:

Table 1

Allowable variation of Blood alcohol concentration	second sample result range from the first
0.00 - 0.14	+ 0.01
0.15 - 0.24	+ 0.02
0.25 - 0.34	+ 0.03
0.35 - or more	+ 0.04

If the variation is more than that allowed, a third breath sample shall be requested from the person being tested and a third result may be obtained. If the third result does not conform to the allowable variation of either of the first two tests, as established in table 1, the person shall be requested to submit a blood or urine sample for analysis by an approved laboratory.
(g) The results of a breath alcohol analysis of a person's breath shall be expressed in terms of grams of alcohol per 210 liters of breath, truncated to the second decimal place. For example, 0.237 found shall be reported as 0.23.
(2) A procedure that is used in conjunction with preliminary breath alcohol analysis shall be approved by the department and shall be in compliance with all of the following provisions:
(a) Preliminary breath alcohol test instruments shall be operated only by operators trained by class IIIA or class IV operators to operate such equipment.
(b) A person may be administered a breath test on a preliminary breath alcohol test instrument only after it has been determined that the person has not smoked, regurgitated, or placed anything in his or her mouth for at least 15 minutes.
(c) Prescribed records shall be maintained at the instrument location and copies shall be forwarded to the department as required.
(3) A person's welfare shall be protected by requesting medical assistance if the person has a body alcohol concentration of 0.35 or more.
History: 1954 ACS 78, Eff. Feb. 28, 1974; 1979 AC; 1984 MR 3, Eff. Apr. 7, 1984; 1988 MR 8, Eff. Aug. 31, 1988; 1992

MR 3, Eff. Apr. 7, 1992; 1992 MR 4, Eff. Apr. 7, 1992 (correction); 1994 MR 12, Eff. Dec. 28, 1994; 2003 MR 18, Eff. Sept. 30, 2003.

R 325.2656
Source: 1994 AACS.

R 325.2657
Source: 1997 AACS.

R 325.2658
Source: 1994 AACS.

R 325.2659 Laboratory tests.
Rule 9. Laboratory testing of blood, urine, or other bodily substances for its alcohol content, for the purpose of the acts, shall be made by the department or a laboratory either licensed under 1968 PA 235, MCL 325.81 to 325.92 or approved by the department. The director of the department shall approve equipment, personnel, and procedures to be used in the determination of the alcohol content of blood, urine, or other bodily substances for the purpose of enforcement of the acts. Failure to maintain the standards prescribed by the department may result in the limitation or revocation of the laboratory license issued under 1968 PA 235 or approval of the laboratory by the department to conduct alcohol tests.
History: 1954 ACS 78, Eff. Feb. 28, 1974; 1979 AC; 2003 MR 18, Eff. Sept. 30, 2003.

FORENSIC SCIENCE DIVISION

ALCOHOL TESTING OF BLOOD AND URINE

R 325.2671
Source: 1993 AACS.

R 325.2672
Source: 1993 AACS.

R 325.2673
Source: 1993 AACS.

R 325.2674
Source: 1993 AACS.

R 325.2675
Source: 1993 AACS.

R 325.2676
Source: 1997 AACS.

R 325.2677
Source: 1997 AACS.

DEPARTMENT OF ENVIRONMENTAL QUALITY

BUREAU OF ENVIRONMENTAL AND OCCUPATIONAL HEALTH

SOLID WASTE DISPOSAL

R 325.2701
Source: 1997 AACS.

R 325.2702
Source: 1997 AACS.

R 325.2721
Source: 1997 AACS.

R 325.2722
Source: 1997 AACS.

R 325.2723
Source: 1997 AACS.

R 325.2731
Source: 1997 AACS.

R 325.2732
Source: 1997 AACS.

R 325.2733
Source: 1997 AACS.

R 325.2734
Source: 1997 AACS.

R 325.2735
Source: 1997 AACS.

R 325.2741
Source: 1997 AACS.

R 325.2742
Source: 1997 AACS.

R 325.2743
Source: 1997 AACS.

R 325.2744
Source: 1997 AACS.

R 325.2745
Source: 1997 AACS.

R 325.2746
Source: 1997 AACS.

R 325.2747
Source: 1997 AACS.

R 325.2749
Source: 1997 AACS.

R 325.2751
Source: 1997 AACS.

R 325.2752
Source: 1997 AACS.

R 325.2753

Source: 1997 AACS.

R 325.2754
Source: 1997 AACS.

R 325.2755
Source: 1997 AACS.

R 325.2756
Source: 1997 AACS.

R 325.2757
Source: 1997 AACS.

R 325.2758
Source: 1997 AACS.

R 325.2759
Source: 1997 AACS.

R 325.2760
Source: 1997 AACS.

R 325.2761
Source: 1997 AACS.

R 325.2762
Source: 1997 AACS.

R 325.2763
Source: 1997 AACS.

R 325.2764
Source: 1997 AACS.

R 325.2765
Source: 1997 AACS.

R 325.2766
Source: 1997 AACS.

R 325.2767
Source: 1997 AACS.

R 325.2771
Source: 1997 AACS.

R 325.2772
Source: 1997 AACS.

R 325.2773
Source: 1997 AACS.

R 325.2774
Source: 1997 AACS.

R 325.2775
Source: 1997 AACS.

R 325.2776
Source: 1997 AACS.

R 325.2777
Source: 1997 AACS.

R 325.2778
Source: 1997 AACS.

R 325.2781
Source: 1997 AACS.

R 325.2782
Source: 1997 AACS.

R 325.2783
Source: 1997 AACS.

R 325.2784
Source: 1997 AACS.

R 325.2785
Source: 1997 AACS.

R 325.2786
Source: 1997 AACS.

R 325.2787
Source: 1997 AACS.

R 325.2788
Source: 1997 AACS.

R 325.2789
Source: 1997 AACS.

DEPARTMENT OF COMMUNITY HEALTH

OFFICE OF THE DIRECTOR

CERTIFICATION OF SPECIAL SERVICES IN HOSPITALS

R 325.3001
Source: 1997 AACS.

R 325.3051
Source: 1997 AACS.

R 325.3053
Source: 1997 AACS.

R 325.3055
Source: 1997 AACS.

R 325.3057
Source: 1997 AACS.

R 325.3058
Source: 1997 AACS.

R 325.3061
Source: 1997 AACS.

R 325.3063
Source: 1997 AACS.

R 325.3064
Source: 1997 AACS.

R 325.3065
Source: 1997 AACS.

R 325.3066
Source: 1997 AACS.

R 325.3067
Source: 1997 AACS.

R 325.3068
Source: 1997 AACS.

R 325.3069
Source: 1997 AACS.

R 325.3070
Source: 1997 AACS.

R 325.3071
Source: 1997 AACS.

R 325.3073
Source: 1997 AACS.

R 325.3074
Source: 1997 AACS.

R 325.3075
Source: 1997 AACS.

R 325.3077
Source: 1997 AACS.

R 325.3078
Source: 1997 AACS.

R 325.3079
Source: 1997 AACS.

R 325.3080

Source: 1997 AACS.

R 325.3082
Source: 1997 AACS.

R 325.3084
Source: 1997 AACS.

R 325.3085
Source: 1997 AACS.

R 325.3087
Source: 1997 AACS.

R 325.3088
Source: 1997 AACS.

R 325.3089
Source: 1997 AACS.

R 325.3091
Source: 1997 AACS.

R 325.3101
Source: 1997 AACS.

R 325.3103
Source: 1997 AACS.

R 325.3105
Source: 1997 AACS.

R 325.3107
Source: 1997 AACS.

R 325.3108
Source: 1997 AACS.

R 325.3110
Source: 1997 AACS.

R 325.3112
Source: 1997 AACS.

R 325.3113
Source: 1997 AACS.

R 325.3114
Source: 1997 AACS.

R 325.3116
Source: 1997 AACS.

R 325.3117
Source: 1997 AACS.

R 325.3118
Source: 1997 AACS.

R 325.3119
Source: 1997 AACS.

R 325.3121
Source: 1997 AACS.

R 325.3123
Source: 1997 AACS.

R 325.3124
Source: 1997 AACS.

R 325.3125
Source: 1997 AACS.

R 325.3127
Source: 1997 AACS.

R 325.3128
Source: 1997 AACS.

R 325.3129
Source: 1997 AACS.

R 325.3131
Source: 1997 AACS.

R 325.3132
Source: 1997 AACS.

R 325.3134
Source: 1997 AACS.

R 325.3136
Source: 1997 AACS.

R 325.3138
Source: 1997 AACS.

R 325.3139
Source: 1997 AACS.

R 325.3140
Source: 1997 AACS.

R 325.3141
Source: 1997 AACS.

R 325.3142
Source: 1997 AACS.

R 325.3144
Source: 1997 AACS.

R 325.3151
Source: 1997 AACS.

R 325.3153
Source: 1997 AACS.

R 325.3155
Source: 1997 AACS.

R 325.3157
Source: 1997 AACS.

R 325.3158
Source: 1997 AACS.

R 325.3159
Source: 1997 AACS.

R 325.3160
Source: 1997 AACS.

R 325.3161
Source: 1997 AACS.

R 325.3162
Source: 1997 AACS.

R 325.3165
Source: 1997 AACS.

R 325.3166
Source: 1997 AACS.

R 325.3167
Source: 1997 AACS.

R 325.3168
Source: 1997 AACS.

R 325.3169
Source: 1997 AACS.

R 325.3170
Source: 1997 AACS.

R 325.3171
Source: 1997 AACS.

R 325.3172
Source: 1997 AACS.

R 325.3173
Source: 1997 AACS.

R 325.3174

Source: 1997 AACS.

R 325.3176
Source: 1997 AACS.

R 325.3178
Source: 1997 AACS.

R 325.3181
Source: 1997 AACS.

R 325.3182
Source: 1997 AACS.

R 325.3184
Source: 1997 AACS.

R 325.3185
Source: 1997 AACS.

R 325.3187
Source: 1997 AACS.

OFFICE OF VITAL AND HEALTH STATISTICS

COMPLETION, FILING, AND REGISTRATION OF VITAL RECORDS DOCUMENTS

R 325.3201
Source: 1981 AACS.

R 325.3202
Source: 1981 AACS.

R 325.3203
Source: 1981 AACS.

R 325.3204
Source: 1981 AACS.

R 325.3205
Source: 1981 AACS.

R 325.3206
Source: 1981 AACS.

R 325.3207
Source: 1981 AACS.

R 325.3208
Source: 1981 AACS.

R 325.3209
Source: 1981 AACS.

R 325.3210
Source: 1981 AACS.

R 325.3211
Source: 1981 AACS.

R 325.3212
Source: 1981 AACS.

R 325.3213
Source: 1981 AACS.

R 325.3214
Source: 1981 AACS.

R 325.3215
Source: 1981 AACS.

R 325.3216
Source: 1981 AACS.

R 325.3217
Source: 1981 AACS.

R 325.3218
Source: 1981 AACS.

R 325.3219
Source: 1981 AACS.

R 325.3220
Source: 1981 AACS.

R 325.3221
Source: 1981 AACS.

VITAL RECORDS INSPECTION AND DISCLOSURE

R 325.3231
Source: 1983 AACS.

R 325.3232
Source: 1983 AACS.

R 325.3233
Source: 1983 AACS.

R 325.3234
Source: 1983 AACS.

R 325.3235
Source: 1983 AACS.

R 325.3236
Source: 1983 AACS.

AMENDMENTS TO VITAL RECORDS

R 325.3251
Source: 1981 AACS.

R 325.3252
Source: 1981 AACS.

R 325.3253
Source: 1981 AACS.

R 325.3254
Source: 1981 AACS.

R 325.3255
Source: 1981 AACS.

R 325.3256
Source: 1981 AACS.

R 325.3257
Source: 1981 AACS.

R 325.3258
Source: 1981 AACS.

R 325.3259
Source: 1981 AACS.

R 325.3260
Source: 1981 AACS.

R 325.3261
Source: 1981 AACS.

R 325.3262
Source: 1981 AACS.

R 325.3263
Source: 1981 AACS.

R 325.3264
Source: 1981 AACS.

R 325.3265
Source: 1981 AACS.

R 325.3266
Source: 1981 AACS.

R 325.3267
Source: 1981 AACS.

DIVISION OF CHILD HEALTH

HEARING SCREENING AND TESTS

R 325.3271
Source: 1981 AACS.

R 325.3272
Source: 1981 AACS.

R 325.3273
Source: 1981 AACS.

R 325.3274
Source: 1981 AACS.

R 325.3275
Source: 1981 AACS.

R 325.3276
Source: 1981 AACS.

DEPARTMENT OF AGRICULTURE

BUREAU OF ENVIRONMENTAL AND OCCUPATIONAL HEALTH

MOBILE HOME PARKS AND SEASONAL MOBILE HOME PARKS

PART 1. GENERAL PROVISIONS

R 325.3311
Source: 1984 AACS.

R 325.3312
Source: 1980 AACS.

R 325.3313
Source: 1980 AACS.

R 325.3314
Source: 1984 AACS.

PART 2. WATER SUPPLY SYSTEMS

R 325.3321
Source: 1984 AACS.

PART 3. SEWAGE COLLECTION AND DISPOSAL SYSTEMS

R 325.3331
Source: 1984 AACS.

R 325.3332
Source: 1984 AACS.

R 325.3333
Source: 1980 AACS.

R 325.3334
Source: 1984 AACS.

R 325.3335
Source: 1984 AACS.

PART 4. DRAINAGE

R 325.3341
Source: 1984 AACS.

R 325.3342
Source: 1984 AACS.

R 325.3343
Source: 1984 AACS.

R 325.3344
Source: 1980 AACS.

R 325.3345
Source: 1980 AACS.

R 325.3346
Source: 1980 AACS.

R 325.3347
Source: 1984 AACS.

R 325.3348
Source: 1980 AACS.

R 325.3349
Source: 1980 AACS.

PART 5. GARBAGE AND RUBBISH STORAGE AND DISPOSAL

R 325.3351
Source: 1984 AACS.

R 325.3352
Source: 1984 AACS.

R 325.3353
Source: 1984 AACS.

R 325.3354
Source: 1984 AACS.

PART 6. INSECT AND RODENT CONTROL

R 325.3361
Source: 1984 AACS.

R 325.3362
Source: 1984 AACS.

R 325.3363
Source: 1980 AACS.

PART 7. GENERAL OPERATION, MAINTENANCE, AND SAFETY

R 325.3371
Source: 1984 AACS.

R 325.3372
Source: 1984 AACS.

R 325.3373

Source: 1984 AACS.

R 325.3374
Source: 1984 AACS.

PART 8. COORDINATION OF APPROVALS FOR CONSTRUCTION

R 325.3381
Source: 1984 AACS.

R 325.3382
Source: 1984 AACS.

R 325.3383
Source: 1980 AACS.

R 325.3384
Source: 1984 AACS.

R 325.3385
Source: 1984 AACS.

PART 9. CERTIFICATION OF COMPLIANCE

R 325.3391
Source: 1984 AACS.

R 325.3392
Source: 1984 AACS.

R 325.3393
Source: 1984 AACS.

DEPARTMENT OF COMMUNITY HEALTH
BUREAU OF DISEASE CONTROL AND LABORATORY SERVICES
VENEREAL DISEASE

R 325.3401
Source: 1997 AACS.

R 325.3402
Source: 1997 AACS.

R 325.3403
Source: 1997 AACS.

R 325.3404
Source: 1997 AACS.

R 325.3405
Source: 1997 AACS.

R 325.3406
Source: 1997 AACS.

R 325.3407
Source: 1997 AACS.

R 325.3408
Source: 1997 AACS.

R 325.3409
Source: 1997 AACS.

R 325.3410
Source: 1981 AACS.

DEPARTMENT OF CONSUMER AND INDUSTRY SERVICES
OCCUPATIONAL HEALTH STANDARDS COMMISSION
EMPLOYEE MEDICAL RECORDS AND TRADE SECRETS

R 325.3451
Source: 1983 AACS.

R 325.3452
Source: 1998-2000 AACS.

R 325.3453
Source: 1998-2000 AACS.

R 325.3454
Source: 1983 AACS.

R 325.3455
Source: 1983 AACS.

R 325.3456
Source: 1993 AACS.

R 325.3457
Source: 1993 AACS.

R 325.3458
Source: 1983 AACS.

R 325.3459
Source: 1993 AACS.

R 325.3460
Source: 1993 AACS.

R 325.3461
Source: 1993 AACS.

R 325.3462
Source: 1983 AACS.

R 325.3463
Source: 1983 AACS.

R 325.3464
Source: 1993 AACS.

R 325.3465
Source: 1983 AACS.

R 325.3466
Source: 1983 AACS.

R 325.3467
Source: 1993 AACS.

R 325.3468
Source: 1983 AACS.

R 325.3469
Source: 1983 AACS.

R 325.3470
Source: 1983 AACS.

R 325.3471
Source: 1993 AACS.

R 325.3472
Source: 1993 AACS.

R 325.3472a
Source: 1993 AACS.

R 325.3473
Source: 1993 AACS.

R 325.3474
Source: 1983 AACS.

R 325.3475
Source: 1983 AACS.

R 325.3476
Source: 1998-2000 AACS.

DEPARTMENT OF COMMUNITY HEALTH

BUREAU OF DISEASE CONTROL AND LABORATORY SERVICES

IMMUNIZATIONS IN SCHOOLS, DAY CARE CENTERS, AND CAMPING PROGRAMS

R 325.3501
Source: 1997 AACS.

R 325.3502
Source: 1997 AACS.

R 325.3503
Source: 1997 AACS.

R 325.3504
Source: 1997 AACS.

R 325.3505
Source: 1997 AACS.

R 325.3506
Source: 1997 AACS.

R 325.3507
Source: 1997 AACS.

R 325.3508
Source: 1997 AACS.

R 325.3509
Source: 1997 AACS.

R 325.3510
Source: 1997 AACS.

R 325.3511
Source: 1997 AACS.

R 325.3512
Source: 1997 AACS.

R 325.3513
Source: 1997 AACS.

DEPARTMENT OF CONSUMER AND INDUSTRY SERVICES

BUREAU OF ENVIRONMENTAL AND OCCUPATIONAL HEALTH

ASBESTOS CONTRACTOR LICENSING

R 325.3551
Source: 1988 AACS.

R 325.3553
Source: 1988 AACS.

R 325.3555
Source: 1988 AACS.

R 325.3557
Source: 1988 AACS.

R 325.3559
Source: 1988 AACS.

R 325.3561
Source: 1988 AACS.

R 325.3563
Source: 1988 AACS.

R 325.3565
Source: 1988 AACS.

R 325.3567
Source: 1988 AACS.

R 325.3569
Source: 1988 AACS.

R 325.3571
Source: 1988 AACS.

AGRICULTURAL LABOR CAMPS

R 325.3601
Source: 1989 AACS.

R 325.3603
Source: 1989 AACS.

R 325.3605
Source: 1989 AACS.

R 325.3607
Source: 1989 AACS.

R 325.3609
Source: 1989 AACS.

R 325.3611
Source: 1989 AACS.

R 325.3613
Source: 1989 AACS.

R 325.3615
Source: 1989 AACS.

R 325.3617
Source: 1989 AACS.

R 325.3619
Source: 1989 AACS.

R 325.3621
Source: 1989 AACS.

R 325.3623
Source: 1989 AACS.

R 325.3625
Source: 1989 AACS.

R 325.3627
Source: 1989 AACS.

R 325.3629
Source: 1989 AACS.

R 325.3631
Source: 1989 AACS.

R 325.3633
Source: 1989 AACS.

R 325.3635
Source: 1989 AACS.

R 325.3637
Source: 1989 AACS.

R 325.3639
Source: 1989 AACS.

R 325.3641
Source: 1989 AACS.

R 325.3643
Source: 1989 AACS.

R 325.3699
Source: 1989 AACS.

DEPARTMENT OF COMMUNITY HEALTH

OFFICE OF THE DIRECTOR

TOXIC SUBSTANCE LOAN PROGRAM

R 325.3701
Source: 1997 AACS.

R 325.3702
Source: 1997 AACS.

R 325.3703
Source: 1997 AACS.

R 325.3704
Source: 1997 AACS.

R 325.3705
Source: 1997 AACS.

R 325.3706
Source: 1997 AACS.

R 325.3707
Source: 1997 AACS.

R 325.3708
Source: 1997 AACS.

R 325.3709
Source: 1997 AACS.

DEPARTMENT OF CONSUMER AND INDUSTRY SERVICES

BUREAU OF HEALTH SYSTEMS

FREESTANDING SURGICAL OUTPATIENT FACILITIES

R 325.3801
Source: 2001 AACS.

R 325.3802
Source: 2001 AACS.

R 325.3803
Source: 2001 AACS.

R 325.3811
Source: 2001 AACS.

R 325.3812
Source: 2001 AACS.

R 325.3815
Source: 2001 AACS.

R 325.3816
Source: 2001 AACS.

R 325.3817
Source: 2001 AACS.

R 325.3818
Source: 2001 AACS.

R 325.3819
Source: 2001 AACS.

R 325.3811
Source: 2001 AACS.

R 325.3826
Source: 2002 AACS.

R 325.3832
Source: 2001 AACS.

R 325.3835
Source: 2001 AACS.

R 325.3851
Source: 2001 AACS.

R 325.3857
Source: 2001 AACS.

R 325.3866
Source: 2001 AACS.

R 325.3867
Source: 2001 AACS.

R 325.3868
Source: 2001 AACS.

R 325.3868a
Source: 2001 AACS.

OFFICE OF SUBSTANCE ABUSE SERVICES

SUBSTANCE ABUSE SERVICES PROGRAMS

R 325.4001
Source: 1997 AACS.

R 325.4002
Source: 1997 AACS.

R 325.4003
Source: 1997 AACS.

R 325.4004
Source: 1997 AACS.

R 325.4005
Source: 1997 AACS.

R 325.4006
Source: 1997 AACS.

R 325.4007
Source: 1997 AACS.

R 325.4008
Source: 1997 AACS.

R 325.4009
Source: 1997 AACS.

R 325.4010
Source: 1997 AACS.

R 325.4011
Source: 1997 AACS.

R 325.4012
Source: 1997 AACS.

R 325.4013
Source: 1997 AACS.

R 325.4014
Source: 1997 AACS.

R 325.4015
Source: 1997 AACS.

R 325.4016
Source: 1997 AACS.

R 325.4017
Source: 1997 AACS.

R 325.4018
Source: 1997 AACS.

R 325.4019
Source: 1997 AACS.

R 325.4021
Source: 1997 AACS.

R 325.4022
Source: 1997 AACS.

R 325.4023
Source: 1997 AACS.

R 325.4024
Source: 1997 AACS.

R 325.4025
Source: 1997 AACS.

R 325.4026
Source: 1997 AACS.

R 325.4027
Source: 1997 AACS.

R 325.4028
Source: 1997 AACS.

R 325.4031
Source: 1997 AACS.

R 325.4032
Source: 1997 AACS.

R 325.4033
Source: 1997 AACS.

R 325.4034
Source: 1997 AACS.

R 325.4035
Source: 1997 AACS.

R 325.4036
Source: 1997 AACS.

R 325.4037
Source: 1997 AACS.

R 325.4038
Source: 1997 AACS.

R 325.4041
Source: 1997 AACS.

R 325.4042
Source: 1997 AACS.

R 325.4043

Source: 1997 AACS.

R 325.4044
Source: 1997 AACS.

R 325.4045
Source: 1997 AACS.

R 325.4046
Source: 1997 AACS.

R 325.4047
Source: 1997 AACS.

R 325.4048
Source: 1997 AACS.

R 325.4051
Source: 1997 AACS.

R 325.4052
Source: 1997 AACS.

R 325.4053
Source: 1997 AACS.

R 325.4054
Source: 1997 AACS.

R 325.4055
Source: 1997 AACS.

R 325.4056
Source: 1997 AACS.

R 325.4057
Source: 1997 AACS.

R 325.4058
Source: 1997 AACS.

R 325.4061
Source: 1997 AACS.

R 325.4062
Source: 1997 AACS.

R 325.4063
Source: 1997 AACS.

R 325.4064
Source: 1997 AACS.

R 325.4065
Source: 1997 AACS.

R 325.4066
Source: 1997 AACS.

R 325.4067
Source: 1997 AACS.

R 325.4071
Source: 1997 AACS.

R 325.4081
Source: 1997 AACS.

R 325.4082
Source: 1997 AACS.

R 325.4083
Source: 1997 AACS.

R 325.4084
Source: 1997 AACS.

PROGRAM MATCH REQUIREMENTS

R 325.4151
Source: 1981 AACS.

R 325.4152
Source: 1981 AACS.

R 325.4153
Source: 1981 AACS.

R 325.4154
Source: 1997 AACS.

R 325.4155
Source: 1981 AACS.

R 325.4156
Source: 1981 AACS.

DEPARTMENT OF CONSUMER AND INDUSTRY SERVICES

DIVISION OF RADIOLOGICAL HEALTH

IONIZING RADIATION

PART 14. MAMMOGRAPHY

GENERAL PROVISIONS

R 325.5601
Source: 1993 AACS.

R 325.5602
Source: 1993 AACS.

R 325.5603
Source: 1993 AACS.

MAMMOGRAPHY AUTHORIZATION

R 325.5605
Source: 1993 AACS.

R 325.5606
Source: 1993 AACS.

R 325.5607
Source: 1993 AACS.

R 325.5608
Source: 1993 AACS.

R 325.5609
Source: 1993 AACS.

R 325.5610
Source: 1993 AACS.

R 325.5611
Source: 1993 AACS.

R 325.5612
Source: 1993 AACS.

R 325.5613
Source: 1993 AACS.

MAMMOGRAPHY SUPERVISOR

R 325.5617
Source: 1993 AACS.

R 325.5618
Source: 1993 AACS.

R 325.5619
Source: 1993 AACS.

OPERATORS OF MAMMOGRAPHY EQUIPMENT

R 325.5621
Source: 1993 AACS.

R 325.5622
Source: 1993 AACS.

R 325.5623
Source: 1993 AACS.

R 325.5624
Source: 1993 AACS.

R 325.5625

Source: 1993 AACS.

RADIATION PHYSICIST

R 325.5631
Source: 1993 AACS.

R 325.5632
Source: 1993 AACS.

R 325.5633
Source: 1993 AACS.

X-RAY EQUIPMENT

R 325.5637
Source: 1993 AACS.

R 325.5638
Source: 1993 AACS.

R 325.5639
Source: 1993 AACS.

R 325.5640
Source: 1993 AACS.

R 325.5641
Source: 1993 AACS.

R 325.5642
Source: 1993 AACS.

R 325.5643
Source: 1993 AACS.

R 325.5644
Source: 1993 AACS.

R 325.5645
Source: 1993 AACS.

R 325.5646
Source: 1993 AACS.

R 325.5647
Source: 1993 AACS.

R 325.5648
Source: 1993 AACS.

R 325.5649
Source: 1993 AACS.

R 325.5650
Source: 1993 AACS.

R 325.5651
Source: 1993 AACS.

R 325.5652
Source: 1993 AACS.

R 325.5655
Source: 1993 AACS.

R 325.5656
Source: 1993 AACS.

QUALITY CONTROL

R 325.5659
Source: 1993 AACS.

R 325.5660
Source: 1993 AACS.

R 325.5661
Source: 1993 AACS.

R 325.5662
Source: 1993 AACS.

R 325.5663
Source: 1993 AACS.

R 325.5664
Source: 1993 AACS.

R 325.5665
Source: 1993 AACS.

DEPARTMENT OF ENVIRONMENTAL QUALITY
DRINKING WATER AND RADIOLOGICAL PROTECTION DIVISION
RADIOACTIVE MATERIAL TRANSPORTATION

R 325.5801
Source: 1997 AACS.

R 325.5802
Source: 1997 AACS.

R 325.5803
Source: 1997 AACS.

R 325.5804
Source: 1997 AACS.

R 325.5805
Source: 1997 AACS.

R 325.5806
Source: 1997 AACS.

R 325.5807
Source: 1997 AACS.

R 325.5808
Source: 1997 AACS.

R 325.5809
Source: 1997 AACS.

R 325.5810
Source: 1997 AACS.

BUREAU OF HEALTH CARE ADMINISTRATION

FREESTANDING SURGICAL OUTPATIENT FACILITIES DIFFERENTIATED FROM PRIVATE PRACTICE OFFICES

R 325.6001
Source: 1980 AACS.

R 325.6002
Source: 1980 AACS.

DEPARTMENT OF COMMUNITY HEALTH AND INSURANCE BUREAU

HEALTH MAINTENANCE ORGANIZATIONS

PART 1. GENERAL PROVISIONS

R 325.6101
Source: 1988 AACS.

R 325.6105
Source: 1988 AACS.

R 325.6110
Source: 1988 AACS.

R 325.6115
Source: 1988 AACS.

R 325.6120
Source: 1997 AACS.

R 325.6125
Source: 1988 AACS.

R 325.6130
Source: 1988 AACS.

R 325.6135
Source: 1988 AACS.

PART 2. STATE ADMINISTRATION

R 325.6201
Source: 1997 AACS.

R 325.6205

Source: 1988 AACS.

R 325.6210
Source: 1988 AACS.

R 325.6215
Source: 1997 AACS.

R 325.6220
Source: 1997 AACS.

R 325.6225
Source: 1997 AACS.

R 325.6230
Source: 1988 AACS.

R 325.6235
Source: 1988 AACS.

R 325.6240
Source: 1988 AACS.

R 325.6245
Source: 1988 AACS.

R 325.6250
Source: 1997 AACS.

R 325.6255
Source: 1997 AACS.

R 325.6260
Source: 1997 AACS.

R 325.6265
Source: 1997 AACS.

R 325.6270
Source: 1988 AACS.

R 325.6275
Source: 1988 AACS.

R 325.6280
Source: 1997 AACS.

R 325.6285
Source: 1988 AACS.

R 325.6290
Source: 1988 AACS.

PART 3. BUSINESS AND OPERATIONAL REQUIREMENTS

R 325.6301
Source: 1988 AACS.

R 325.6305

Source: 1988 AACS.

R 325.6310
Source: 1988 AACS.

R 325.6315
Source: 1988 AACS.

R 325.6320
Source: 1997 AACS.

R 325.6325
Source: 1997 AACS.

R 325.6330
Source: 1988 AACS.

R 325.6335
Source: 1988 AACS.

R 325.6340
Source: 1988 AACS.

R 325.6345
Source: 1988 AACS.

R 325.6350
Source: 1988 AACS.

R 325.6355
Source: 1988 AACS.

R 325.6360
Source: 1988 AACS.

R 325.6365
Source: 1988 AACS.

PART 4. SUBSCRIBER CONTRACTS, COVERAGE, AND RELATED REQUIREMENTS

R 325.6401
Source: 1988 AACS.

R 325.6405
Source: 1988 AACS.

R 325.6410
Source: 1988 AACS.

R 325.6415
Source: 1988 AACS.

R 325.6420
Source: 1988 AACS.

R 325.6425
Source: 1988 AACS.

R 325.6430

Source: 1988 AACS.

PART 5. MARKETING AND ENROLLMENT

R 325.6501
Source: 1988 AACS.

R 325.6505
Source: 1988 AACS.

R 325.6510
Source: 1988 AACS.

R 325.6515
Source: 1997 AACS.

PART 6. STANDARDS FOR SERVICES, STAFFING, QUALITY ASSURANCE, AND UTILIZATION REVIEW

R 325.6601
Source: 1988 AACS.

R 325.6605
Source: 1988 AACS.

R 325.6610
Source: 1988 AACS.

R 325.6615
Source: 1988 AACS.

R 325.6620
Source: 1988 AACS.

R 325.6625
Source: 1988 AACS.

R 325.6635
Source: 1988 AACS.

PART 7. FACILITY STANDARDS

R 325.6701
Source: 1988 AACS.

R 325.6702
Source: 1988 AACS.

R 325.6705
Source: 1997 AACS.

R 325.6710
Source: 1991 AACS.

R 325.6715
Source: 1988 AACS.

R 325.6720
Source: 1988 AACS.

R 325.6725
Source: 1988 AACS.

R 325.6730
Source: 1988 AACS.

R 325.6735
Source: 1988 AACS.

R 325.6740
Source: 1988 AACS.

R 325.6745
Source: 1988 AACS.

R 325.6750
Source: 1988 AACS.

R 325.6755
Source: 1988 AACS.

R 325.6760
Source: 1997 AACS.

R 325.6765
Source: 1997 AACS.

R 325.6770
Source: 1997 AACS.

R 325.6775
Source: 1997 AACS.

R 325.6780
Source: 1988 AACS.

R 325.6785
Source: 1988 AACS.

R 325.6790
Source: 1988 AACS.

R 325.6795
Source: 1988 AACS.

PART 8. ENROLLEE CLINICAL RECORDS; REPORTS AND INSPECTIONS

R 325.6801
Source: 1988 AACS.

R 325.6805
Source: 1988 AACS.

R 325.6810
Source: 1988 AACS.

R 325.6815
Source: 1988 AACS.

R 325.6820
Source: 1997 AACS.

R 325.6825
Source: 1988 AACS.

R 325.6830
Source: 1988 AACS.

R 325.6835
Source: 1988 AACS.

PART 9. HEALTH MAINTENANCE ORGANIZATION INCLUSION IN HEALTH BENEFIT PLANS

R 325.6901
Source: 1988 AACS.

R 325.6905
Source: 1988 AACS.

R 325.6910
Source: 1988 AACS.

R 325.6925
Source: 1988 AACS.

R 325.6930
Source: 1988 AACS.

R 325.6935
Source: 1988 AACS.

R 325.6950
Source: 1988 AACS.

R 325.6955
Source: 1988 AACS.

R 325.6960
Source: 1988 AACS.

R 325.6965
Source: 1997 AACS.

DEPARTMENT OF COMMUNITY HEALTH
OFFICE OF VITAL AND HEALTH STATISTICS
DISINTERMENT—REINTERMENT

R 325.8051
Source: 1982 AACS.

R 325.8052
Source: 1982 AACS.

R 325.8053
Source: 1982 AACS.

R 325.8054
Source: 1982 AACS.

R 325.8055
Source: 1982 AACS.

R 325.8056
Source: 1982 AACS.

R 325.8057
Source: 1982 AACS.

LABORATORY AND EPIDEMIOLOGICAL SERVICES ADMINISTRATION

DISEASE SURVEILLANCE AND CONTROL

R 325.9001
Source: 1997 AACS.

R 325.9002
Source: 1997 AACS.

R 325.9003
Source: 1997 AACS.

R 325.9004
Source: 1997 AACS.

R 325.9005
Source: 1997 AACS.

R 325.9006
Source: 1997 AACS.

R 325.9007
Source: 1997 AACS.

R 325.9008
Source: 1997 AACS.

R 325.9009
Source: 1997 AACS.

R 325.9010
Source: 1997 AACS.

R 325.9011
Source: 1997 AACS.

R 325.9012
Source: 1981 AACS.

BUREAU OF LABORATORY AND EPIDEMIOLOGICAL SERVICES

DEFINITION OF “INFECTIOUS AGENT”

R 325.9031
Source: 1987 AACS.

DIVISION OF RESEARCH AND DEVELOPMENT

CHRONIC DISEASE PREVENTION AND CONTROL LIST

R 325.9041
Source: 1989 AACS.

OFFICE OF THE STATE REGISTRAR AND CENTER FOR HEALTH STATISTICS

CANCER REPORTING

R 325.9051
Source: 1985 AACS.

R 325.9052
Source: 1985 AACS.

R 325.9053
Source: 1985 AACS.

R 325.9054
Source: 1985 AACS.

R 325.9055
Source: 1985 AACS.

R 325.9056
Source: 1985 AACS.

R 325.9057
Source: 1985 AACS.

CENTER FOR HEALTH PROMOTION

SPINAL CORD AND TRAUMATIC BRAIN INJURY REPORTING

R 325.9061
Source: 1993 AACS.

R 325.9062
Source: 1993 AACS.

R 325.9063
Source: 1993 AACS.

R 325.9064
Source: 1993 AACS.

R 325.9065
Source: 1993 AACS.

R 325.9066
Source: 1993 AACS.

R 325.9067
Source: 1993 AACS.

BIRTH DEFECTS REPORTING

R 325.9071
Source: 1991 AACS.

R 325.9072
Source: 1991 AACS.

R 325.9073
Source: 1991 AACS.

R 325.9074
Source: 1991 AACS.

R 325.9075
Source: 1991 AACS.

R 325.9076
Source: 1991 AACS.

HEALTH LEGISLATION AND POLICY DEVELOPMENT

BLOOD LEAD ANALYSIS REPORTING

R 325.9081
Source: 1997 AACS.

R 325.9082
Source: 1997 AACS.

R 325.9083
Source: 1997 AACS.

R 325.9084
Source: 1997 AACS.

R 325.9085
Source: 1997 AACS.

R 325.9086
Source: 1997 AACS.

R 325.9087
Source: 1997 AACS.

BUREAU OF HEALTH SYSTEMS

CERTIFICATE OF NEED

PART 1. GENERAL PROVISIONS

R 325.9101
Source: 1996 AACS.

R 325.9103
Source: 1996 AACS.

R 325.9105
Source: 1996 AACS.

R 325.9109
Source: 1996 AACS.

R 325.9121
Source: 1996 AACS.

R 325.9123
Source: 1996 AACS.

R 325.9125
Source: 1996 AACS.

PART 2. LETTERS OF INTENT; APPLICATIONS; REVIEWS

R 325.9201
Source: 1996 AACS.

R 325.9203
Source: 1996 AACS.

R 325.9204
Source: 1996 AACS.

R 325.9205
Source: 1996 AACS.

R 325.9206
Source: 1996 AACS.

R 325.9207
Source: 1996 AACS.

R 325.9208
Source: 1996 AACS.

R 325.9215
Source: 1996 AACS.

R 325.9227
Source: 1996 AACS.

R 325.9229
Source: 1996 AACS.

PART 3. APPROVAL AND ISSUANCE; DISAPPROVAL

R 325.9301
Source: 1996 AACS.

R 325.9303
Source: 1996 AACS.

PART 4. TERMS AND CONDITIONS

R 325.9401
Source: 1986 AACS.

R 325.9403
Source: 1996 AACS.

R 325.9413
Source: 1996 AACS.

R 325.9415
Source: 1996 AACS.

R 325.9417
Source: 1996 AACS.

R 325.9419
Source: 1996 AACS.

PART 5. ADMINISTRATIVE HEARINGS

R 325.9501
Source: 1996 AACS.

R 325.9503
Source: 1996 AACS.

R 325.9505
Source: 1986 AACS.

R 325.9507
Source: 1996 AACS.

R 325.9509
Source: 1996 AACS.

R 325.9511
Source: 1996 AACS.

R 325.9513
Source: 1996 AACS.

R 325.9515
Source: 1996 AACS.

R 325.9517
Source: 1996 AACS.

R 325.9519
Source: 1996 AACS.

R 325.9521
Source: 1996 AACS.

R 325.9523
Source: 1996 AACS.

R 325.9525
Source: 1996 AACS.

DEPARTMENT OF COMMUNITY HEALTH

HEALTH LEGISLATION AND POLICY DEVELOPMENT

LEAD HAZARD REMEDIATION

R 325.9901
Source: 1998-2000 AACS.

R 325.9902
Source: 1998-2000 AACS.

R 325.9903
Source: 1998-2000 AACS.

R 325.9904
Source: 1998-2000 AACS.

R 325.9905
Source: 1998-2000 AACS.

R 325.9906
Source: 1998-2000 AACS.

R 325.9907
Source: 1998-2000 AACS.

R 325.9908
Source: 1998-2000 AACS.

R 325.9909
Source: 1998-2000 AACS.

R 325.9910
Source: 1998-2000 AACS.

R 325.9911
Source: 1998-2000 AACS.

R 325.9912
Source: 1998-2000 AACS.

R 325.9913
Source: 1998-2000 AACS.

R 325.9914
Source: 1998-2000 AACS.

R 325.9915
Source: 1998-2000 AACS.

R 325.9916
Source: 1998-2000 AACS.

R 325.9917
Source: 1998-2000 AACS.

R 325.9918
Source: 1998-2000 AACS.

R 325.9919
Source: 1998-2000 AACS.

R 325.9920
Source: 1998-2000 AACS.

R 325.9921
Source: 1998-2000 AACS.

R 325.9922
Source: 1998-2000 AACS.

R 325.9923
Source: 1998-2000 AACS.

R 325.9924
Source: 1998-2000 AACS.

R 325.9925
Source: 1998-2000 AACS.

DEPARTMENT OF ENVIRONMENTAL QUALITY

HEALTH SERVICES ADMINISTRATION

SUPPLYING WATER TO THE PUBLIC

PART 1. GENERAL PROVISIONS

R 325.10102 Definitions; A, B.
Rule 102. As used in these rules:
(a) "Act" means 1976 PA 399, MCL 325.1001 et seq. and known as the safe drinking water act.
(b) "Action level" means the concentration of lead or copper in water as specified in R 325.10604f(1)(c) that determines, in some cases, the treatment requirements that a water system is required to complete.
(c) "Advisory board" means the advisory board of examiners appointed by the director under section 9(2) of the act.
(d) "Alteration" means the modification of, or addition to, an existing waterworks system, or portion of the system, that affects any of the following:
(i) Flow.
(ii) Capacity.
(iii) System service area.
(iv) Source.
(v) Treatment.
(vi) Reliability.
(e) "Approved analytical technique" means a calculation, determination, or other laboratory examination or procedure that has been approved by the United States environmental protection agency pursuant to 40 C.F.R. part 141, which is adopted by reference in R 325.10605.
(f) "Approved basement" means a basement which has walls and a floor that are constructed of concrete or its equivalent, which is essentially watertight, which is effectively drained, and which is in daily use.
(g) "Aquifer" means an underground water-bearing formation which is saturated and which transmits water in sufficient quantities to serve as a water supply.
(h) "Artesian" means a condition of internal pressure which causes the water level in a well to rise above the aquifer used to

supply water at the well location.
(i) "Back-up operator" means a certified operator designated by the public water supply to be in charge of the waterworks system or portion of the waterworks system when the operator-in-charge is not available.
(j) "Bottled drinking water" means water that is ultimately sold, provided, or offered for human consumption in a closed container.
History: 1954 ACS 94, Eff. Jan. 12, 1978; 1979 AC; 1991 MR 11, Eff. Nov. 22, 1991; 1994 MR 12, Eff. Jan. 5, 1995; 2000 MR 19, Eff. Dec. 8 2000; 2003 MR 2, Eff. Jan. 29, 2003.

R 325.10103 Definitions; C.
Rule 103. As used in these rules:
(a) "C" in "CT calculation" means the residual disinfectant concentration measured in milligrams per liter in a representative sample of water.
(b) "Casing" means a durable pipe that is placed in a well to prevent the soil from caving in and to seal off surface drainage or undesirable water, gases, contaminants, or other fluids and prevent them from entering the well and the aquifer supplying the well.
(c) "Casing vent" means an outlet at the upper terminal of a well casing which provides atmospheric pressure in the well and which allows the escape of gases when present.
(d) "Certificate" means a document that is issued by the department to a person who meets the qualification requirements for operating a waterworks system or a portion of the waterworks system.
(e) "Certified operator" means an operator who holds a certificate.
(f) "Community supply" or "community water supply" or "community water system" means a public water supply that provides year-round service to not fewer than 15 living units or that regularly provides year-round service to not fewer than 25 residents.
(g) "Complete treatment" means a series of processes, including disinfection and filtration, to treat surface water or ground water under the direct influence of surface water, or to treat ground water not under the direct influence of surface water that uses precipitative softening, to produce a finished water meeting state drinking water standards.
(h) "Compliance cycle" means the 9-year calendar year cycle during which public water systems are required to monitor. Each compliance cycle consists of three 3-year compliance periods. The first calendar year cycle begins January 1, 1993, and ends December 31, 2001; the second begins January 1, 2002, and ends December 31, 2010; the third begins January 1, 2011, and ends December 31, 2019.
(i) "Compliance period" means a 3-year calendar year period within a compliance cycle. Each compliance cycle has three 3-year compliance periods. Within the first compliance cycle, the first compliance period runs from January 1, 1993, to December 31, 1995; the second from January 1, 1996, to December 31, 1998; the third from January 1, 1999, to December 31, 2001.
(j) "Comprehensive performance evaluation (CPE)" means a thorough review and analysis of a treatment plant's performance-based capabilities and associated administrative, operation, and maintenance practices. It is conducted to identify factors that may be adversely impacting a plant's capability to achieve compliance and emphasizes approaches that can be implemented without significant capital improvements. For purposes of compliance, the comprehensive performance evaluation shall consist of at least all of the following components:
(i) Assessment of plant performance.
(ii) Evaluation of major unit processes.
(iii) Identification and prioritization of performance limiting factors.
(iv) Assessment of the applicability of comprehensive technical assistance.
(v) Preparation of a CPE report.
(k) "Confluent growth" means a continuous bacterial growth that covers the entire filtration area of a membrane filter, or portion of a filtration area, in which bacterial colonies are not discrete.
(l) "Construction" means the erection, installation, or alteration of a waterworks system, or any portion of a waterworks system, that affects any of the following:
(i) Flow.
(ii) Capacity.
(iii) System service area.
(iv) Source.
(v) Treatment.
(vi) Reliability.
(m) "Contested cases" means matters that are within the definition of a contested case as set forth by section 3(3) of 1969 PA 306, MCL 24.203(3), and matters of issue that involve any of the following which are issued by the director, the

department, or the division pursuant to the act and these rules:
(i) Orders.
(ii) Exemptions.
(iii) Variances.
(iv) Stipulations.
(v) Consent agreements.
(vi) Permits.
(vii) Licenses.
(viii) Certificates.
(n) "Contested case hearing" means a hearing that is initiated by the department or a person under chapters 4, 5, and 6 of 1969 PA 306, MCL 24.271 to 24.306.
(o) "Contaminant" means a physical, chemical, biological, or radiological substance or matter in water.
(p) "Contingency plan" means a plan for use by a supplier of water in the event of an emergency.
(q) "Conventional filtration" means a series of processes, including coagulation, flocculation, sedimentation, and filtration, resulting in substantial particulate removal.
(r) "Corrosion inhibitor" means a substance that is capable of reducing the corrosivity of water toward metal plumbing materials, especially lead and copper, by forming a protective film on the interior surface of those materials.
(s) "Cross connection" means a connection or arrangement of piping or appurtenances through which a backflow could occur.
(t) "CT calculation" means the product of residual disinfectant concentration (C) in milligrams per liter determined at or before the first customer and the corresponding disinfectant contact time (T) in minutes; C*T is calculated at rated capacity. The total CT shall be the sum of individual CTs of each disinfectant sequence.
(u) "Customer service connection" means the pipe between a water main and customer site piping or building plumbing system.
(v) "Customer site piping" means an underground piping system owned or controlled by the customer that conveys water from the customer service connection to building plumbing systems and other points of use on lands owned or controlled by the customer. Customer site piping does not include any system that incorporates treatment to protect public health.
History: 1954 ACS 94, Eff. Jan. 12, 1978; 1979 AC; 1991 MR 11, Eff. Nov. 22, 1991; 1993 MR 6, Eff. July 2, 1993; 1994 MR 12, Eff. Jan. 5, 1995; 2000 MR 19 Eff. Dec. 8, 2000; 2002 MR 10, Eff. May 30, 2002; 2003 MR 2, Jan. 29, 2003.

R 325.10104 Definitions; D, E.
Rule 104. As used in these rules:
(a) "Department" means the department of environmental quality or its authorized agent or representative.
(b) "Deviation" means an exception to a department rule establishing minimum standards or requirements issued in writing or as a condition to a permit to a supplier of water.
(c) "Direct filtration" means a series of processes, including coagulation and filtration, but excluding sedimentation, resulting in substantial particulate removal.
(d) "Director" means the director of environmental quality or his or her authorized agent or representative.
(e) "Disinfectant contact time" (T in CT calculations) means the time in minutes that it takes for water to move from the point of disinfectant application or the previous point of disinfectant residual measurement to a point at or before the point where residual disinfectant concentration is measured. Disinfectant contact time in pipelines shall be calculated based on plug flow by dividing the internal volume of the pipe by the maximum hourly flow rate through that pipe. Disinfectant contact time within mixing basins and storage reservoirs shall be determined by tracer studies or an equivalent demonstration.
(f) "Distribution system" means a system that consists of the following components through which water is distributed and used or intended for use for drinking or household purposes:
(i) Piping.
(ii) Transmission or distribution mains.
(iii) Pumps.
(iv) Pumping stations.
(v) Storage tanks.
(vi) Controls.
(vii) Associated appurtenances.
(g) "Division" means the drinking water and radiological protection division of the department.
(h) "Domestic or other non-distribution system plumbing problem" means a coliform contamination problem in a public water system which has more than 1 service connection that is limited to the specific service connection from which the coliform positive sample was taken.
(i) "Drawdown" means the difference between the static water level and the pumping water level in a well or, for a flowing

artesian well, the difference between an established datum above ground and the pumping water level.
(j) "Effective corrosion inhibitor residual," for the purpose of lead and copper control, means a concentration that is sufficient to form a passivating film on the interior walls of a pipe.
(k) "Emergency" means a situation in a public water supply that results in contamination, loss of pressure, lack of adequate supply of water, or other condition that poses an imminent hazard or danger to the public health.
(l) "Enhanced coagulation" means the addition of sufficient coagulant for improved removal of disinfection byproduct precursors by conventional filtration treatment.
(m) "Enhanced softening" means the improved removal of disinfection byproduct precursors by precipitative softening.
(n) "EPA" means the United States environmental protection agency.
(o) "Equivalent certificate" means a certificate which is issued to certain individuals. Individuals eligible for an equivalent certificate do not hold a current certificate but were issued certification before the effective date of the current rules.
(p) "Established ground surface" means the intended or actual finished grade or elevation of the surface of the ground at the site of a water supply facility.
(q) "Exemption" means an order, with appropriate conditions, time schedules, and compliance requirements, that is issued by the director to a supplier of water permitting a public water supply to be in temporary noncompliance with a state drinking water standard, including a specified treatment technique.
History: 1954 ACS 94, Eff. Jan. 12, 1978; 1979 AC; 1991 MR 11, Eff. Nov. 22, 1991; 1994 MR 12, Eff. Jan. 5, 1995; 1998 MR 3, Eff. Apr, 8, 1998; 2000 MR 19, Eff. Dec. 8, 2000; 2003 MR 2, Eff. Jan. 29, 2003.

R 325.10105 Definitions; F to L.
Rule 105. As used in these rules:
(a) "Federal act" means the safe drinking water act of 1974, 42 U.S.C. S300f et seq. and the provisions of 40 C.F.R. part 35, §35.600 to §35.630; 40 C.F.R. part 141; and 40 C.F.R. part 142 promulgated by EPA (1999) under the federal act.
(b) "Filter profile" means a graphical representation of individual filter performance, based on continuous turbidity measurements or total particle counts versus time for an entire filter run, from startup to backwash inclusively, that includes an assessment of filter performance while another filter is being backwashed.
(c) "Finished water" means water that is ready for distribution to the customers or users of a public water supply.
(d) "Firm capacity," as applied to wells, pumping stations, or units of treatment systems, means the production capability of each respective part of the waterworks system with the largest well, pump, or treatment unit out of service.
(e) "First draw sample" means a 1-liter sample of tap water which has been standing in plumbing pipes for not less than 6 hours and which is collected without flushing the tap.
(f) "GAC10" means granular activated carbon filter beds with an empty-bed contact time of 10 minutes based on average daily flow and a carbon reactivation frequency of every 180 days.
(g) "Gravity storage tank" means an elevated or ground level finished water storage reservoir that, during normal use, operates under atmospheric pressure.
(h) "Ground water" or "groundwater" means the water in the zone of saturation in which all of the pore spaces of the subsurface material are filled with water.
(i) "Ground water under the direct influence of surface water (GWUDI)" means any water beneath the surface of the ground with significant occurrence of insects or other macroorganisms, algae, or large-diameter pathogens such as Giardia lamblia or Cryptosporidium, or significant and relatively rapid shifts in water characteristics, such as turbidity, temperature, conductivity, or pH, that closely correlate to climatological or surface water conditions. The department will determine direct influence for individual sources in accordance with this definition and R 325.10611(1) and will notify the system of its determination.
(j) "Grout" means neat cement, concrete, or other sealing material which is approved by the department and which is used to seal a well casing in a well.
(k) "Haloacetic acids (five) (HAA5)" mean the sum of the concentrations in milligrams per liter of the haloacetic acid compounds (monochloroacetic acid, dichloroacetic acid, trichloroacetic acid, monobromoacetic acid, and dibromoacetic acid), rounded to 2 significant figures after addition.
(l) "Imminent hazard" means that, in the judgment of the director, there is a violation, or a condition that may cause a violation, of the state drinking water standards at a public water supply requiring immediate action to prevent endangering the health of people.
(m) "Initial compliance period" means January 1993 to December 1995. For a system that has less than 150 service connections, the initial compliance period is January 1996 to December 1998 for contaminants listed in part 6 of these rules that have an effective date of January 17, 1994.
(n) "Large water supply" or "large water system," for the purpose of lead and copper control, means a public water supply that serves more than 50,000 persons.

(o) "Lead service line" means a service line which is made of lead and which connects the water main to the building inlet and any lead pigtail, gooseneck, or other fitting that is connected to the lead line.
(p) "License" means the license that is issued by the department to a water hauler, or for a water hauling tank, pursuant to section 18 of the act.
(q) "Limited treatment system" means a treatment system, including, but not limited to, disinfection, fluoridation, iron removal, ion exchange treatment, phosphate application, or filtration other than complete treatment.
(r) "Living unit" means a house, apartment, or other domicile occupied or intended to be occupied on a day-to-day basis by an individual, family group, or equivalent.
History: 1954 ACS 94, Eff. Jan. 12, 1978; 1979 AC; 1994 MR 12, Eff. Jan. 5, 1995; 1994 MR 12, Eff. Jan. 5, 1995; 2000 MR 19, Eff. Dec. 8, 2000; 2002 MR 10, Eff. May 30, 2002; 2003 MR 2, Eff. Jan. 29, 2003.

R 325.10106 Definitions; M to O.
Rule 106. As used in these rules:
(a) "Maximum residual disinfectant level (MRDL)" means a level of a disinfectant added for water treatment that may not be exceeded at the consumer's tap without an unacceptable possibility of adverse health effects.
(b) "Maximum TTHM potential" means the maximum concentration of total trihalomethanes produced in a given water containing a disinfectant residual after 7 days at a temperature of 25 degrees Centigrade or above.
(c) "MCL" means the maximum permissible level of a contaminant in water that is delivered to any user of a public water supply.
(d) "MDL" means method detection limit for analytical work done to determine compliance with the act.
(e) "Medium-size water system" or "medium-size water supply," for the purpose of lead and copper control, means a public water supply that serves more than 3,300 persons and fewer than or equal to 50,000 persons.
(f) "Membrane filtration" means any filtration process using tubular or spiral wound elements that exhibits the ability to mechanically separate water from other ions and solids by creating a pressure differential and flow across a membrane with an absolute pore size of less than 1 micron.
(g) "Monitoring requirement" means a schedule, frequency, and location for the sampling and analysis of water that is required by the provisions of part 7 of these rules to determine whether a public water supply is in compliance with the state drinking water standards.
(h) "Near the first service connection" means at 1 of the 20% of all service connections in the entire system that are nearest the water supply treatment facility, as measured by water transport time within the distribution system.
(i) "Noncommunity supply" or "noncommunity water supply" or "noncommunity water system" means a public water supply that is not a community supply, but that has not fewer than 15 service connections or that serves not fewer than 25 individuals on an average daily basis for not less than 60 days per year.
(j) "Nontransient noncommunity water supply" or "nontransient noncommunity water system" or "NTNC" means a noncommunity supply that serves not fewer than 25 of the same individuals on an average daily basis more than 6 months per year. This definition includes public water supplies in places of employment, schools, and day-care centers.
(k) "NTU" means nephelometric turbidity unit.
(l) "One hundred-year drought elevation" means the minimum projected water surface elevation that would occur at a location once in a period of 100 years.
(m) "One hundred-year flood elevation" means the maximum projected water surface elevation that would occur at a location once in a period of 100 years.
(n) "Operating shift" means that period of time during which operator decisions that affect public health are necessary for proper operation of the waterworks system.
(o) "Operator" means an individual who operates a waterworks system or a portion of a waterworks system.
(p) "Operator in charge" means a certified operator who is designated by the owner of a public water supply as the responsible individual in overall charge of a waterworks system, or portion of a waterworks system, who makes decisions regarding the daily operational activities of the system that will directly impact the quality or quantity of drinking water.
(q) "Optimal corrosion control treatment," for the purpose of lead and copper control, means the corrosion control treatment that minimizes the lead and copper concentrations at users' taps while ensuring that the treatment does not cause the public water supply to be in violation of any national primary drinking water regulations.
History: 1954 ACS 94, Eff. Jan. 12, 1978; 1979 AC; 1984 MR 6, Eff. July 6, 1984; 1989 MR 8, Eff. Sept. 13, 1989; 1991 MR 11, Eff. Nov. 22, 1991; 1994 MR 12, Eff. Jan. 5, 1995; 2000 MR 19, Eff. Dec. 8, 2000; 2002 MR 10, Eff. May 30, 2002; 2003 MR 2, Eff. Jan. 29, 2003.

R 325.10107
Source: 2002 AACS.

R 325.10108 Definitions; S.
Rule 108. As used in these rules:
(a) "Sanitary survey" means an evaluation, including an on-site review of a waterworks system or a portion of the waterworks system, including all of the following applicable components for existing or potential health hazards for the purpose of determining the ability of the public water supply to produce, treat, and distribute adequate quantities of water meeting state drinking water standards:
(i) Source.
(ii) Treatment.
(iii) Distribution system.
(iv) Finished water storage.
(v) Pumps, pump facilities, and controls.
(vi) Monitoring, reporting, and data verification.
(vii) System management and operation.
(viii) Operator compliance with state requirements.
(b) "Service connection" means a direct connection from a distribution water main to a living unit or other site to provide water for drinking or household purposes.
(c) "Service line sample" means a 1-liter sample of water that has been standing for not less than 6 hours in a service line.
(d) "Shift operator" means a certified operator, other than the operator in charge, who is in charge of an operating shift of a waterworks system.
(e) "Single-family structure," for the purpose of lead and copper control, means a building which is constructed as a single-family residence and which is currently used as either a residence or a place of business.
(f) "Small water supply" or "small water system," for the purpose of lead and copper control, means a public water supply that serves fewer than 3,301 persons.
(g) "SOC" means synthetic organic chemical.
(h) "Source" means the point of origin of raw water or means treated water that is purchased or obtained by a public water supply, by a water hauler, or by a person who provides bottled water.
(i) "State drinking water standards" means quality standards setting limits for contaminant levels or establishing treatment techniques to meet standards necessary to protect the public health.
(j) "Static water level" means the distance measured from an established datum at or above ground level to the water surface in a well which is not being pumped, which is not under the influence of pumping, and which is not flowing under artesian pressure.
(k) "Subpart H systems" means public water systems using surface water or ground water under the direct influence of surface water as a source.
(l) "Suction line" means a pipe or line that is connected to the inlet side of a pump or pumping equipment.
(m) "Supplier of water" or "supplier" means a person who owns or operates a public water supply, and includes a water hauler.
(n) "Surface water" means water that rests or flows on the surface of the ground.
(o) "SUVA" means specific ultraviolet absorption at 254 nanometers (nm), an indicator of the humic content of water. It is a calculated parameter obtained by dividing a sample's ultraviolet absorption at a wavelength of 254 nm (uv_{254}) (in m^{-1}) by its concentration of dissolved organic carbon (DOC) (in mg/l). Therefore, SUVA units are l/mg-m.
(p) "System with a single-service connection" means a public water supply that supplies drinking water to consumers through a single-service line.
History: 1954 ACS 94, Eff. Jan. 12, 1978; 1979 AC; 1991 MR 11, Eff. Nov. 22, 1991; 1993 MR 6, Eff. July 2, 1993; 1994 MR 12, Eff. Jan. 5, 1995; 2000 MR 19 Eff. Dec. 8, 2000; 2002 MR 10, Eff. May 30, 2002; 2003 MR 2, Eff. Jan. 29, 2003.

R 325.10109 Definitions; T to Y.
Rule 109. As used in these rules:
(a) "Test well" means a well that is drilled on a site that has not been approved for use as a production well in accordance with the provisions of part 8 of these rules.
(b) "Too numerous to count" means that the total number of bacterial colonies is more than 200 on a 47-millimeter diameter membrane filter.
(c) "Total organic carbon (TOC)" means total organic carbon in mg/l measured using heat, oxygen, ultraviolet irradiation, chemical oxidants, or combinations of these oxidants that convert organic carbon to carbon dioxide, rounded to 2 significant figures.
(d) "Total trihalomethanes" or "TTHM" means the sum of the concentration, in milligrams per liter, rounded to 2 significant

figures, of all of the following:
(i) The trihalomethane compounds.
(ii) Trichloromethane (chloroform).
(iii) Dibromochloromethane.
(iv) Bromodichloromethane.
(v) Tribromomethane (bromoform).
(e) "Transient noncommunity water supply" or "transient noncommunity water system" means a noncommunity supply that does not meet the definition of nontransient noncommunity water supply in R 325.10106(h).
(f) "Treatment system" means a facility or structure and associated appurtenances installed for the purpose of treating drinking water before delivery to a distribution system.
(g) "Treatment technique" means a minimum treatment requirement or a necessary methodology or technology that is employed by a supplier of water for the control of the chemical, physical, biological, or radiological characteristics of the public water supply.
(h) "Trihalomethane" or "THM" means 1 of the family of organic compounds named as derivatives of methane, wherein 3 of the 4 hydrogen atoms in methane are each substituted by a halogen atom in the molecular structure.
(i) "Unregulated contaminants" means a group of contaminants for which state drinking water standards have not been promulgated, but for which monitoring requirements apply.
(j) "Variance" means an order, with appropriate conditions and compliance schedules and requirements, which is issued by the director to a supplier of water and which permits a public water supply to be in noncompliance with a state drinking water standard, including a specified treatment technique.
(k) "VOC" means volatile organic chemical.
(l) "Water hauler" means a person engaged in bulk vehicular transportation of water to other than the water hauler's own household which is intended for use or used for drinking or household purposes. Excluded from this definition are those persons providing water solely for employee use.
(m) "Water transportation tank" means a tank that is associated with an over-the-road vehicle that is used for the bulk transport of drinking water.
(n) "Waterworks system" or "system" means a system of pipes and structures through which water is obtained and distributed, including, but not limited to all of the following which are actually used or intended for use for the purpose of furnishing water for drinking or household purposes:
(i) Wells and well structures, intakes, and cribs.
(ii) Pumping stations.
(iii) Treatment plants.
(iv) Storage tanks.
(v) Pipelines and appurtenances.
(vi) A combination of the items specified in this subdivision.
(o) "Year-round service" means the ability of a supplier of water to provide drinking water on a continuous basis to a living unit or facility.
History: 1954 ACS 94, Eff. Jan. 12, 1978; 1979 AC; 1984 MR 6, Eff. July 6, 1984; 1989 MR 8, Eff. Sept. 13, 1989; 1991 MR 11, Eff. Nov. 22, 1991; 1993 MR 6, Eff. July 2, 1993; 1994 MR 12, Eff. Jan. 5, 1995; 1998 MR 3, Eff. Apr. 8, 1998; 2000 MR 19 Eff. Dec. 8, 2000; 2002 MR 10, Eff. May 30, 2002; 2003 MR 2, Eff. Jan. 29, 2003.

R 325.10110
Source: 1998-2000 AACS.

R 325.10111
Source: 1998-2000 AACS.

R 325.10112
Source: 2002 AACS.

R 325.10113
Source: 1998-2000 AACS.

R 325.10116
Source: 2002 AACS.

PART 3. VARIANCES AND EXEMPTIONS

R 325.10303
Source: 1991 AACS.

R 325.10304
Source: 1991 AACS.

R 325.10306
Source: 1991 AACS.

R 325.10308a
Source: 1984 AACS.

R 325.10308b Best available technology.
Rule 308b. (1) The department identifies the following as the best technology, treatment technique, or other means generally available for achieving compliance with the MCL:
(a) For organic contaminants that are referenced in R 325.10604b and R 325.10604d, the best available technologies, treatment techniques, or other means available for achieving compliance with the MCLS are granular activated carbon (GAC), packed tower aeration (PTA), or oxidation (OX), as listed in table 1 of this rule.

Table 1 Best available technologies for organic contaminants

Contaminant	GAC	PTA	OX
Alachlor	x		
Aldicarb	x		
Aldicarb sulfone	x		
Aldicarb sulfoxide	x		
Atrazine	x		
Benzene	x	x	
Benzo(a)pyrene	x		
Carbofuran	x		
Carbon tetrachloride	x	x	
Chlordane	x		
Dalapon	x		
2,4-D	x		
Di (2-ethylhexyl)adipate	x	x	
Di (2-ethylhexyl)phthalate	x		
Dibromochloropropane (DBCP)	x	x	
o-Dichlorobenzene	x	x	
para-Dichlorobenzene	x	x	
1,2-Dichloroethane	x	x	
1,1-Dichloroethylene	x	x	
cis-1,2-Dichloroethylene	x	x	
trans-1,2-Dichloroethylene	x	x	
Dichloromethane		x	
1,2-Dichloropropane	x	x	
Dinoseb	x		
Diquat	x		
Endothall	x		
Endrin	x		
Ethylbenzene	x	x	
Ethylene Dibromide (EDB)	x	x	
Glyphosate			x
Heptachlor	x		
Heptachlor epoxide	x		
Hexachlorobenzene	x		

Contaminant	GAC	PTA	OX
Hexachlorocyclopentadiene	x	x	
Lindane	x		
Methoxychlor	x		
Monochlorobenzene	x	x	
Oxamyl (Vydate)	x		
Pentachlorophenol	x		
Picloram	x		
Polychlorinated biphenyls(PCB)	x		
Simazine	x		
Styrene	x	x	
2,3,7,8-TCDD (Dioxin)	x		
Tetrachloroethylene	x	x	
Toluene	x	x	
Toxaphene	x		
2,4,5-TP (Silvex)	x		
1,2,4-Trichlorobenzene	x	x	
1,1,1-Trichloroethane	x	x	
1,1,2-Trichloroethane	x	x	
Trichloroethylene	x	x	
Vinyl chloride		x	
Xylene	x	x	

(b) For inorganic contaminants that are referenced in R 325.10604c, the best available technologies, treatment techniques, or other means available for achieving compliance with the MCLs are listed in table 2 of this rule.

Table 2 Best available technologies for inorganic contaminants

Chemical name	Best available technologies
Antimony	2,7
Asbestos	2,3,8
Barium	5,6,7,9
Beryllium	1,2,5,6,7
Cadmium	2,5,6,7
Chromium	2,5,6[2],7
Cyanide	5,7,10
Mercury	2[1],4,6[1],7[1]
Nickel	5,6,7
Nitrate	5,7,9
Nitrite	5,7
Selenium	1,2[3],6,7,9
Thallium	1,5

[1] Best available technology only if influent Hg concentrations are 10 µg/l or less.
[2] Best available technology for chromium III only.
[3] Best available technology for selenium IV only.

Key to best available technologies in table:
1 = activated alumina
2 = coagulation/filtration
3 = direct and diatomite filtration
4 = granular activated carbon
5 = ion exchange
6 = lime softening
7 = reverse osmosis
8 = corrosion control
9 = electrodialysis

10 = chlorine

(c) For disinfection byproducts under R 325.10610(1), the best available technologies, treatment techniques, or other means available for achieving compliance with the MCLs are listed in table 3 of this rule.

Table 3 Best available technologies for disinfection byproducts

Disinfection byproduct	Best available technology
TTHM or HAA5	Enhanced coagulation or enhanced softening or GAC10, with chlorine as the primary and residual disinfectant.
Bromate	Control of ozone treatment process to reduce production of bromate.
Chlorite	Control of treatment processes to reduce disinfectant demand and control of disinfection treatment processes to reduce disinfectant levels.

(d) The best available technologies, treatment techniques, or other means available for achieving compliance with the maximum residual disinfectant levels under R 325.10610a(1) are control of treatment processes to reduce disinfectant demand and control of disinfection treatment processes to reduce disinfectant levels.
(2) The department shall require suppliers of community water systems and nontransient, noncommunity water systems to employ a treatment method identified in subrule (1) of this rule as a condition for granting a variance, except as provided in subrule (3) of this rule. If, after the treatment method is installed in the system, the system cannot meet the MCL, then the system shall be eligible for a variance pursuant to the provisions of this part and section 20 of the act.
(3) If a supplier of water can demonstrate through comprehensive engineering assessments, which may include pilot plant studies, that the treatment methods identified in subrule (1) of this rule would only achieve a de minimis reduction in contaminants, the department may issue a schedule of compliance that requires the supplier of water being granted the variance to examine other treatment methods as a condition of obtaining the variance.
(4) If the department determines that a treatment method identified in subrule (3) of this rule is technically feasible, the department may require the supplier of water to use that treatment method in connection with a compliance schedule issued pursuant to the provisions of section 20 of the act. The department's determination shall be based on studies by the supplier of water and other relevant information.
History: 1989 MR 8, Eff. Sept. 13, 1989; 1993 MR 6, Eff. July 2, 1993; 1994 MR 12, Eff. Jan. 5, 1995; 1998 MR 3, Eff. Apr. 8, 1998; 2003 MR 2, Eff. Jan. 29, 2003.

PART 4. PUBLIC NOTIFICATION AND PUBLIC EDUCATION

R 325.10401 Purpose.
Rule 401. The purpose of this part is to prescribe requirements of suppliers of water to provide public notification to persons served by a public water system when the public water system is not in compliance with a state drinking water standard, a monitoring requirement, or the requirements of a compliance schedule prescribed by a variance or exemption or while a variance or exemption is in effect. This part also prescribes requirements for public education when a community or nontransient noncommunity water system exceeds the lead action level based on tap water samples collected under R 325.10710a. This part also prescribes requirements for consumer confidence reports (CCR) and annual water quality reports.
History: 1954 ACS 94, Eff. Jan. 12, 1978; 1979 AC; 1989 MR 8, Eff. Sept. 13, 1989; 1994 MR 12, Eff. Jan. 5, 1995; 2003 MR 2, Eff. Jan. 29, 2003.

R 325.10401a General public notification requirements.
Rule 401a. (1) Each supplier of a community water system, nontransient noncommunity water system, or transient noncommunity water system shall give notice for violations of the maximum contaminant level (MCL), maximum residual disinfection level (MRDL), treatment technique (TT), monitoring requirements, testing procedures in these rules, and for other situations, as listed in the following provisions:
(a) Violations and other situations requiring public notice, including all of the following:
(i) Failure to comply with an applicable maximum contaminant level (MCL) or maximum residual disinfectant level (MRDL).
(ii) Failure to comply with a prescribed treatment technique (TT).

(iii) Failure to perform water quality monitoring, as required by part 7 of these rules.
(iv) Failure to comply with testing procedures as prescribed by part 6 of these rules.
(b) Variance and exemptions under part 3 of these rules, including both of the following:
(i) Operation under a variance or an exemption.
(ii) Failure to comply with the requirements of a schedule that has been set under a variance or exemption.
(c) Special public notices, including all of the following:
(i) Occurrence of a waterborne disease outbreak or other waterborne emergency.
(ii) Exceedance of the nitrate MCL by noncommunity water systems, where granted permission by the department.
(iii) Fluoride level above 2 mg/l as specified in R 325.10408a.
(iv) Availability of unregulated contaminant monitoring data.
(v) Other violations and situations which are determined by the department to require a public notice under this part and which are not already listed in table 1 of this rule.
The tier assignment for each specific violation or situation requiring a public notice is identified in table 1 of this rule.
(2) Public notice requirements are divided into 3 tiers to take into account the seriousness of the violation or situation and of the potential adverse health effects that may be involved. The public notice requirements for each violation or situation listed in subrule (1) of this rule are determined by the tier to which the violation or situation is assigned. The definition of each tier is provided in the following provisions:
(a) Tier 1 public notice is required for violations and situations that have significant potential to have serious adverse effects on human health as a result of short-term exposure.
(b) Tier 2 public notice is required for all other violations and situations that have potential to have serious adverse effects on human health.
(c) Tier 3 public notice is required for all other violations and situations not included in tier 1 and tier 2.
The tier assignment for each specific violation or situation is identified in table 1 of this rule.
(3) Suppliers shall provide public notice to the following:
(a) Each supplier shall provide public notice to persons served by the system as specified in this part. Suppliers that sell or otherwise provide drinking water to other public water systems, such as to consecutive systems, shall give public notice to the supplier of the consecutive system. The consecutive system shall provide public notice to the persons it serves.
(b) If a public water system has a violation in a portion of the distribution system that is physically or hydraulically isolated from other parts of the distribution system, the department will grant permission, which shall be in writing, to the supplier to limit distribution of the public notice to only persons served by that portion of the system which is out of compliance. To be physically separated, the supplier shall show that the affected portion of the distribution system is separated from other parts of the distribution system with no interconnections. To be considered hydraulically separated, the supplier shall show that the design of the distribution system or the system operation, or both, created a situation where water in the affected portion is effectively isolated from the water in all other parts of the distribution system because of projected water flow patterns and water pressure zones.
(4) The supplier, within 10 days of completing the public notification requirements under this part for the initial public notice and applicable repeat notices, shall submit to the department a certification that it fully complied with the public notification regulations. The supplier shall include with this certification a representative copy of each type of notice distributed, published, posted, and made available to the persons served by the system and to the media.

Table 1 Violations and other situations requiring public notice

Contaminant	MCL/MRDL/TT violations [1]		Monitoring & testing procedure violations	
	Tier of public notice required	Citation	Tier of public notice required	Citation
I. Violations of MCL, MRDL, treatment technique, monitoring and reporting, and testing procedure requirements:				
A. Microbiological contaminants				
Total coliform	2	R 325.10602(a) and (b)	3	R 325.10705, R 325.10707, R 325.10707a, R 325.10702(2), R 325.10707b(2)
Fecal coliform/E. coli	1	R 325.10602(c)	1, 3 [2]	R 325.10707b(2)

Contaminant	MCL/MRDL/TT violations [1]		Monitoring & testing procedure violations	
	Tier of public notice required	Citation	Tier of public notice required	Citation
Turbidity (for TT violations resulting from a single exceedance of maximum allowable turbidity level)	2, 1 [3]	R 325.10611b	3	R 325.10605, R 325.10720(2)(a) and (b)
Violations, other than violations resulting from single exceedance of max. allowable turbidity level (TT)	2	R 325.10611, R 325.10611a, and R 325.10611b	3	R 325.10605 R 325.10720(2)(c) and (d)
B. Inorganic chemicals (IOCs)				
Antimony	2	R 325.10604c(1)	3	R 325.10710(4)-(5)
Arsenic	2	R 325.10604c(1)	3	R 325.10710(4)-(5) R 325.605
Asbestos (fibers longer than 10 µm)	2	R 325.10604c(1)	3	R 325.10710(4), (6)
Barium	2	R 325.10604c(1)	3	R 325.10710(4)-(5)
Beryllium	2	R 325.10604c(1)	3	R 325.10710(4)-(5)
Cadmium	2	R 325.10604c(1)	3	R 325.10710(4)-(5)
Chromium (total)	2	R 325.10604c(1)	3	R 325.10710(4)-(5)
Cyanide (free)	2	R 325.10604c(1)	3	R 325.10710(4)-(5)
Fluoride	2	R 325.10604c(1)	3	R 325.10710(4)-(5)
Mercury (inorganic)	2	R 325.10604c(1)	3	R 325.10710(4)-(5)
Nitrate (as nitrogen)	1	R 325.10604c(1)	1, 3 [4]	R 325.10710(3)-(4), (7), (9)(b)
Nitrite (as nitrogen)	1	R 325.10604c(1)	1, 3 [4]	R 325.10710(3)-(4), (8), (9)(b)
Total nitrate and nitrite (as nitrogen)	1	R 325.10604c(1)	3	R 325.10710(4)
Selenium	2	R 325.10604c(1)	3	R 325.10710(4)-(5)
Thallium	2	R 325.10604c(1)	3	R 325.10710(4)-(5)
C. Lead and copper rule (action level for lead is 0.015 mg/l, for copper is 1.3 mg/l)				
Lead and copper rule (TT)	2	R 325.10604f(1) – (5) and R 325.10410	3	R 325.10710a – R 325.10710c and R 325.10605
D. Synthetic organic chemicals (SOCS)				
2,4-D	2	R 325.10604d(1)	3	R 325.10717
2,4,5-TP (silvex)	2	R 325.10604d(1)	3	R 325.10717
Alachlor	2	R 325.10604d(1)	3	R 325.10717
Atrazine	2	R 325.10604d(1)	3	R 325.10717
Benzo(a)pyrene (PAHs)	2	R 325.10604d(1)	3	R 325.10717
Carbofuran	2	R 325.10604d(1)	3	R 325.10717
Chlordane	2	R 325.10604d(1)	3	R 325.10717
Dalapon	2	R 325.10604d(1)	3	R 325.10717
Di (2-ethylhexyl) adipate	2	R 325.10604d(1)	3	R 325.10717
Di (2-ethylhexyl) phthalate	2	R 325.10604d(1)	3	R 325.10717
Dibromochloropropane	2	R 325.10604d(1)	3	R 325.10717
Dinoseb	2	R 325.10604d(1)	3	R 325.10717
Dioxin (2,3,7,8-TCDD)	2	R 325.10604d(1)	3	R 325.10717
Diquat	2	R 325.10604d(1)	3	R 325.10717

Contaminant	MCL/MRDL/TT violations [1]		Monitoring & testing procedure violations	
	Tier of public notice required	Citation	Tier of public notice required	Citation
Endothall	2	R 325.10604d(1)	3	R 325.10717
Endrin	2	R 325.10604d(1)	3	R 325.10717
Ethylene dibromide	2	R 325.10604d(1)	3	R 325.10717
Glyphosate	2	R 325.10604d(1)	3	R 325.10717
Heptachlor	2	R 325.10604d(1)	3	R 325.10717
Heptachlor epoxide	2	R 325.10604d(1)	3	R 325.10717
Hexachlorobenzene	2	R 325.10604d(1)	3	R 325.10717
Hexachlorocyclo-pentadiene	2	R 325.10604d(1)	3	R 325.10717
Lindane	2	R 325.10604d(1)	3	R 325.10717
Methoxychlor	2	R 325.10604d(1)	3	R 325.10717
Oxamyl (vydate)	2	R 325.10604d(1)	3	R 325.10717
Pentachlorophenol	2	R 325.10604d(1)	3	R 325.10717
Picloram	2	R 325.10604d(1)	3	R 325.10717
Polychlorinated biphenyls [PCBs]	2	R 325.10604d(1)	3	R 325.10717
Simazine	2	R 325.10604d(1)	3	R 325.10717
Toxaphene	2	R 325.10604d(1)	3	R 325.10717
E. Volatile organic chemicals (VOCs)				
Benzene	2	R 325.10604b(1)	3	R 32510716
Carbon tetrachloride	2	R 325.10604b(1)	3	R 32510716
Chlorobenzene (monochloro-benzene)	2	R 325.10604b(1)	3	R 32510716
O-dichlorobenzene	2	R 325.10604b(1)	3	R 32510716
P-dichlorobenzene	2	R 325.10604b(1)	3	R 32510716
1,2-dichloroethane	2	R 325.10604b(1)	3	R 32510716
1,1-dichloroethylene	2	R 325.10604b(1)	3	R 32510716
Cis-1,2-dichloroethylene	2	R 325.10604b(1)	3	R 32510716
Trans-1,2-dichloroethylene	2	R 325.10604b(1)	3	R 32510716
Dichloromethane	2	R 325.10604b(1)	3	R 32510716
1,2-dichloropropane	2	R 325.10604b(1)	3	R 32510716
Ethylbenzene	2	R 325.10604b(1)	3	R 32510716
Styrene	2	R 325.10604b(1)	3	R 32510716
Tetrachloro-ethylene	2	R 325.10604b(1)	3	R 32510716
Toluene	2	R 325.10604b(1)	3	R 32510716
1,2,4-trichlorobenzene	2	R 325.10604b(1)	3	R 32510716
1,1,1-trichloroethane	2	R 325.10604b(1)	3	R 32510716
1,1,2-trichloroethane	2	R 325.10604b(1)	3	R 32510716
Trichloroethylene	2	R 325.10604b(1)	3	R 32510716
Vinyl chloride	2	R 325.10604b(1)	3	R 32510716
Xylenes (total)	2	R 325.10604b(1)	3	R 32510716
F. Radioactive contaminants				
Beta/photon emitters	2	R 325.10604	3	R 325.10605, R 325.10726, R 325.10728, R 325.10729
Alpha emitters (gross alpha)	2	R 325.10603(b)	3	R 325.10605, R 325.10722, R 325.10725

Contaminant	MCL/MRDL/TT violations [1]		Monitoring & testing procedure violations	
	Tier of public notice required	Citation	Tier of public notice required	Citation
Combined radium (226 & 228)	2	R 325.10603(a)	3	R 325.10605, R 325.10722, R 325.10725
G. Disinfection byproducts (DBPs), byproduct precursors, disinfectant residuals. Where disinfection is used in the treatment of drinking water, disinfectants combine with organic and inorganic matter present in water to form chemicals called disinfection byproducts (DBPs). The department sets standards for controlling the levels of disinfectants and DBPs in drinking water, including trihalomethanes (THMS) and haloacetic acids (HAAs).[5]				
Total trihalomethanes [TTHMs]	2	R 325.10610 [6] R 325.10610b(2)(a)	3	R 325.10719a – R 325.10719e(1) and (2)(a)
Haloacetic acids (HAAs)	2	R 325.10610 R 325.10610b(2)(a)	3	R 325.10719e(1) and (2)(a)
Bromate	2	R 325.10610 R 325.10610b(2)(b)	3	R 325.10719e(1) and (2)(c)
Chloramine (MRDL)	2	R 325.10610a R 325.10610b(3)(a)	3	R 325.10719e(1) and (3)
Chlorine (MRDL)	2	R 325.10610a R 325.10610b(3)(a)	3	R 325.10719e(1) and (3)
Chlorite	2	R 325.10610 R 325.10610b(2)(c)	3	R 325.10719e(1) and (2)(b)
Chlorine dioxide (MRDL), where any 2 consecutive daily samples at entrance to distribution system only are above MRDL	2	R 325.10610a R 325.10610b(3)(b)(ii)	2 [7], 3	R 325.10719e(1), (3)(b)(i) and (iii)
Chlorine dioxide (MRDL), where sample(s) in distribution system the next day are also above MRDL	1 [8]	R 325.10610a R 325.10610b(3)(b)(i)	1	R 325.10719e(1), (3)(b)(ii) and (iii)
Control of DBP precursors—TOC (TT)	2	R 325.10610b(4) R 325.10610c	3	R 325.10719e(1) and (4)
Development of monitoring plan	N/A	N/A	3	R 325.10719e(5)
H. Other treatment techniques				
Acrylamide (TT)	2	R 325.10604e	N/A	N/A
Epichlorohydrin (TT)	2	R 325.10604e	N/A	N/A
II. Other monitoring:				
Unregulated contaminants	N/A	N/A	3	R 325.10717b
Nickel	N/A	N/A	3	R 325.10710(4), (5), and (9)
III. Public notification for variances and exemptions:				
Operation under a variance or exemption	3	R 325.10302 and R 325.10312	N/A	N/A
Violation of conditions of a variance or exemption	2	R 325.10302 and R 325.10312	N/A	N/A
IV. Other situations requiring public notification:				
Fluoride level above 2 mg/l	3	R 325.10408a(1)	N/A	N/A

Contaminant	MCL/MRDL/TT violations [1]		Monitoring & testing procedure violations	
	Tier of public notice required	Citation	Tier of public notice required	Citation
Exceedance of nitrate MCL for noncommunity systems, as allowed by the department	1	R 325.10604c(6)	N/A	N/A
Availability of unregulated contaminant monitoring data	3	R 325.10407	N/A	N/A
Waterborne disease outbreak	1	R 325.10734(4)	N/A	N/A
Other waterborne emergencies and other situations as determined by the department	1 OR 2 OR 3 [9]	N/A	N/A	N/A

[1] MCL - Maximum contaminant level, MRDL - maximum residual disinfectant level, TT - treatment technique.

[2] Failure to test for fecal coliform or E. coli is a tier 1 violation if testing is not done after any repeat sample tests positive for coliform. All other total coliform monitoring and testing procedure violations are tier 3.

[3] Systems with treatment technique violations involving a single exceedance of a maximum turbidity limit under R 325.10611b(1) are required to initiate consultation with the department within 24 hours after learning of the violation. Based on this consultation, the department may subsequently decide to elevate the violation to tier 1. If a system is unable to make contact with the department in the 24-hour period, the violation is automatically elevated to tier 1.

[4] Failure to take a confirmation sample within 24 hours for nitrate or nitrite after an initial sample exceeds the MCL is a tier 1 violation. Other monitoring violations for nitrate are tier 3.

[5] See R 325.10610, R 325.10610a, and R 325.10719e for disinfection byproduct MCLs, disinfectant MRDLs, and related monitoring requirements.

[6] There are different MRDLs for TTHMs for different types of systems. See the footnote in R 325.10610(1) for the MRDLs and effective dates.

[7] Failure to monitor for chlorine dioxide at the entrance to the distribution system the day after exceeding the MRDL at the entrance to the distribution system is a tier 2 violation.

[8] If any daily sample taken at the entrance to the distribution system exceeds the MRDL for chlorine dioxide and 1 or more samples taken in the distribution system the next day exceed the MRDL, tier 1 notification is required. Failure to take the required samples in the distribution system after the MRDL is exceeded at the entry point also triggers tier 1 notification.

[9] Waterborne emergencies require a tier 1 public notice. The department may place other situations in any tier it believes appropriate, based on threat to public health.
History: 2003 MR 2, Eff. Jan. 29, 2003.

R 325.10402 Tier 1 public notice; form, manner, and frequency of notice.
Rule 402. (1) A tier 1 public notice is required for all of the following violations and situations:
(a) Violation of the MCL for total coliforms when fecal coliform or E. coli are present in the water distribution system as specified in R 325.10602, or when the supplier fails to test for fecal coliforms or E. coli when a repeat sample tests positive for coliform as specified in R 325.10707.
(b) Violation of the MCL for nitrate, nitrite, or total nitrate and nitrite, as defined in R 325.10604c, or when the supplier fails to take a confirmation sample within 24 hours of the supplier's receipt of the first sample result showing an exceedance of the

nitrate or nitrite MCL, as specified in R 325.10710(9)(b).
(c) Exceedance of the nitrate MCL by noncommunity water systems, where permitted to exceed the MCL by the department, as required under R 325.10408b.
(d) Violation of the MRDL for chlorine dioxide, as defined in R 325.10610a(1), when 1 or more samples taken in the distribution system the day following an exceedance of the MRDL at the entrance of the distribution system exceed the MRDL, or when the supplier does not take the required samples in the distribution system, as specified in R 325.10610b(3)(b).
(e) Violation of the treatment technique requirement resulting from a single exceedance of the maximum allowable turbidity limit under R 325.10611b(1) as identified in table 1 of R 325.10401a, where the department determines after consultation that a tier 1 notice is required or where consultation does not take place within 24 hours after the supplier learns of the violation.
(f) Occurrence of a waterborne disease outbreak or other waterborne emergency, such as a failure or significant interruption in key water treatment processes, a natural disaster that disrupts the water supply or distribution system, or a chemical spill or unexpected loading of possible pathogens into the source water that significantly increases the potential for drinking water contamination.
(g) Other violations or situations with significant potential to have serious adverse effects on human health as a result of short-term exposure, as determined by the department either in these rules or on a case-by-case basis.
The tier assignment for each specific violation or situation is listed in table 1 of R 325.10401a.
(2) A tier 1 public notice shall be provided pursuant to all the following provisions:
(a) Suppliers shall provide the public notice as soon as practical but not later than 24 hours after the supplier learns of the violation or situation.
(b) The supplier shall initiate consultation with the department as soon as practical, but not later than 24 hours after the supplier learns of the violation or situation, to determine additional public notice requirements.
(c) The supplier shall comply with additional public notification requirements, including repeat notices or direction on the duration of the posted notices, established as a result of consultation with the department. These additional requirements may include the timing, form, manner, frequency, and content of applicable repeat notices, and other actions designed to reach all persons served.
(3) Suppliers shall provide the notice within 24 hours in a form and manner reasonably calculated to reach all persons served. The form and manner used by the supplier are to fit the specific situation, but shall be designed to reach residential, transient, and nontransient users of the system. In order to reach all persons served, suppliers shall use, at a minimum, 1 or more of the following forms of delivery:
(a) Appropriate broadcast media, such as radio and television.
(b) Posting of the notice in conspicuous locations throughout the area served by the system.
(c) Hand delivery of the notice to persons served by the system.
(d) Another delivery method approved, in writing, by the department.
History: 1954 ACS 94, Eff. Jan. 12, 1978; 1979 AC; 1989 MR 8, Eff. Sept. 13, 1989; 2003 MR 2, Eff. Jan. 29, 2003.

R 325.10403 Tier 2 public notice; form, manner, and frequency of notice.
Rule 403. (1) A tier 2 public notice is required for all of the following violations and situations:
(a) All violations of the MCL, MRDL, and treatment technique requirements, except where a tier 1 notice is required under R 325.10402(1) or where the department determines that a tier 1 notice is required.
(b) Violations of the monitoring and testing procedure requirements, where the department determines that a tier 2 rather than a tier 3 public notice is required, taking into account potential health impacts and persistence of the violation.
(c) Failure to comply with the terms and conditions of a variance or exemption in place.
The tier assignment for each specific violation or situation is listed in table 1 of R 325.10401a.
(2) A tier 2 public notice shall be provided pursuant to all the following provisions:
(a) Suppliers shall provide the public notice as soon as practical, but not later than 30 days after the supplier learns of the violation or situation. If the public notice is posted, the notice shall remain in place for as long as the violation or situation exists, but not for less than 7 days, even if the violation or situation is resolved. The department may, on a case-by-case basis, allow additional time for the initial notice of up to 3 months from the date the supplier learns of the violation or situation. Circumstances that may warrant an extension include, but are not limited to, coordination with billing cycles for mailing purposes and violations that were quickly resolved and no longer pose any risk to persons served. The department shall not grant an extension to the 30-day deadline for an unresolved violation posing potential risk from short-term exposure. Extensions granted by the department shall be in writing.
(b) The supplier shall repeat the notice every 3 months as long as the violation or situation exists, unless the department determines that appropriate circumstances warrant a different repeat notice frequency. The repeat notice shall not be given less frequently than once per year. The department shall not allow less frequent repeat notice for an MCL violation of total

coliform under R 325.10602 or a treatment technique violation of filtration or disinfection under R 325.10611, R 325.10611a, or R 325.10611b. The department may, on a case-by-case basis, reduce the repeat notice frequency for other ongoing violations requiring a tier 2 repeat notice. Circumstances that may warrant a reduction in frequency include, but are not limited to, coordination with billing cycles for mailing purposes and consolidating notices for violations and situations occurring within a given year into an annual notice to provide for more effective communication with the consumer. Department determinations allowing repeat notices to be given less frequently than once every 3 months shall be in writing.
(c) For the turbidity violations specified in this subdivision, suppliers shall consult with the department as soon as practical but not later than 24 hours after the supplier learns of the violation, to determine whether a tier 1 public notice under R 325.10402(1) is required to protect public health. When consultation does not take place within the 24-hour period, the supplier shall distribute a tier 1 notice of the violation within the next 24 hours, which shall be not more than 48 hours after the supplier learns of the violation, and shall follow the requirements under R 325.10402(2) and (3). Consultation with the department is required for violations of the treatment technique requirement under R 325.10611 resulting from a single exceedance of the maximum allowable turbidity limit under R 325.611b.
(3) Suppliers shall provide the initial tier 2 public notice and applicable repeat notices in a form and manner that is reasonably calculated to reach persons served in the required time period. The form and manner of the public notice may vary based on the specific situation and type of system, but it shall, at a minimum, meet all of the following requirements:
(a) Unless directed otherwise by the department, in writing, suppliers of community water systems shall provide notice by using both of the following forms of delivery:
(i) Mail or other direct delivery to each customer receiving a bill and to other service connections to which water is delivered by the supplier.
(ii) Other methods reasonably calculated to reach other persons regularly served by the system, if they would not normally be reached by the notice required in paragraph (i) of this subdivision. Other persons served may include those who do not pay water bills or do not have service connection addresses, such as house renters, apartment dwellers, university students, nursing home patients, and prison inmates. Other methods may include any of the following:
(A) Publication in a local newspaper.
(B) Delivery of multiple copies for distribution by customers that provide their drinking water to others, such as apartment building owners or large private employers.
(C) Posting in public places served by the system or on the internet.
(D) Delivery to community organizations.
(b) Unless directed otherwise by the department, in writing, suppliers of noncommunity water systems shall use both of the following forms of delivery:
(i) Posting the notice in conspicuous locations throughout the distribution system frequented by persons served by the system, or mailing or directly delivering to each customer and service connection, where known.
(ii) Other methods reasonably calculated to reach other persons served by the system if they would not normally be reached by the notice required in paragraph (i) of this subdivision. Other persons served may include those who may not see a posted notice because the notice is not in a location they routinely pass by. Other methods may include any of the following:
(A) Publication in a local newspaper or newsletter distributed to customers.
(B) Use of e-mail to notify employees or students.
(C) Delivery of multiple copies in central locations, such as community centers.
History: 1954 ACS 94, Eff. Jan. 12, 1978; 1979 AC; 1989 MR 8, Eff. Sept. 13, 1989; 1991 MR 11, Eff. Nov. 22, 1991; 1993 MR 6, Eff. July 2, 1993; 2003 MR 2, Eff. Jan. 29, 2003.

R 325.10404 Tier 3 public notice; form, manner, and frequency of notice.
Rule 404. (1) A tier 3 public notice is required for all of the following violations and situations listed in this subrule:
(a) Monitoring violations under part 7 of these rules, except where a tier 1 notice is required under R 325.10402(1) or where the department determines that a tier 2 notice is required.
(b) Failure to comply with a testing procedure established in part 6 of these rules, except where a tier 1 notice is required under R 325.10402(1) or where the department determines that a tier 2 notice is required.
(c) Operation under a variance or exemption granted under section 20 of the safe drinking water act, 1976 PA 399, MCL 325.1001 et seq. and part 3 of these rules.
(d) Availability of unregulated contaminant monitoring results, as required under R 325.10407.
(e) Fluoride level above 2 mg/l as specified in R 325.10408a.
The tier assignment for each specific violation or situation is listed in table 1 of R 325.10401a.
(2) A tier 3 public notice shall be provided pursuant to all the following provisions:
(a) Suppliers shall provide the public notice not later than 1 year after the supplier learns of the violation or situation or begins operating under a variance or exemption. Following the initial notice, the supplier shall repeat the notice annually for

as long as the violation, variance, exemption, or other situation exists. If the public notice is posted, the notice shall remain in place for as long as the violation, variance, exemption, or other situation exists, but for not less than 7 days, even if the violation or situation is resolved.
(b) Instead of individual tier 3 public notices, a supplier may use an annual report detailing all violations and situations that occurred during the previous 12 months, as long as the timing requirements of subdivision (a) of this subrule are met.
(3) Suppliers shall provide the initial tier 3 public notice and applicable repeat notices in a form and manner that is reasonably calculated to reach persons served in the required time period. The form and manner of the public notice may vary based on the specific situation and type of system, but it shall, at a minimum, meet all of the following requirements:
(a) Unless directed otherwise by the department, in writing, suppliers of community water systems shall provide notice by using both of the following forms of delivery:
(i) Mail or other direct delivery to each customer receiving a bill and to other service connections to which water is delivered by the supplier.
(ii) Other methods reasonably calculated to reach other persons regularly served by the system, if they would not normally be reached by the notice required in paragraph (i) of this subdivision. Other persons served may include those who do not pay water bills or do not have service connection addresses, such as house renters, apartment dwellers, university students, nursing home patients, and prison inmates. Other methods may include any of the following:
(A) Publication in a local newspaper.
(B) Delivery of multiple copies for distribution by customers that provide their drinking water to others, such as apartment building owners or large private employers.
(C) Posting in public places served by the system or on the internet.
(D) Delivery to community organizations.
(b) Unless directed otherwise by the department, in writing, suppliers of noncommunity water systems shall provide notice by using both of the following forms of delivery:
(i) Posting the notice in conspicuous locations throughout the distribution system frequented by persons served by the system or mailing or directly delivering to each customer and service connection, where known.
(ii) Other methods reasonably calculated to reach other persons served by the system if they would not normally be reached by the notice required in paragraph (i) of this subdivision. Other persons served may include those who may not see a posted notice because the notice is not in a location they routinely pass by. Other methods may include any of the following:
(A) Publication in a local newspaper or newsletter distributed to customers.
(B) Use of e-mail to notify employees or students.
(C) Delivery of multiple copies in central locations, such as community centers.
(4) For community water systems, the consumer confidence report (CCR) required under R 325.10411 to R 325.10415 may be used as a vehicle for the initial tier 3 public notice and all required repeat notices, if all of the following requirements are satisfied:
(a) The CCR is provided to persons served not later than 12 months after the supplier learns of the violation or situation as required under subrule (2) of this rule.
(b) The tier 3 notice contained in the CCR follows the content requirements under R 325.10405.
(c) The CCR is distributed following the delivery requirements under subrule (3) of this rule.
History: 1954 ACS 94, Eff. Jan. 12, 1978; 1979 AC; 1989 MR 8, Eff. Sept. 13, 1989; 1991 MR 11, Eff. Nov. 22, 1991; 2003 MR 2, Eff. Jan. 29, 2003.

R 325.10405 Content of the public notice.
Rule 405. (1) When a system has a violation or situation requiring public notification, each public notice shall include all of the following elements:
(a) A description of the violation or situation, including the contaminant or contaminants of concern, and, as applicable, the contaminant level or levels.
(b) When the violation or situation occurred.
(c) The potential adverse health effects from the violation or situation, including the standard language under subrule (4)(a) or (4)(b) of this rule, whichever is applicable.
(d) The population at risk, including subpopulations particularly vulnerable if exposed to the contaminant in their drinking water.
(e) Whether alternative water supplies should be used.
(f) What actions consumers should take, including when they should seek medical help, if known.
(g) What the supplier is doing to correct the violation or situation.
(h) When the supplier expects to return to compliance or resolve the situation.
(i) The name, business address, and phone number of the supplier or designee of the supplier as a source of additional

information concerning the notice.
(j) A statement to encourage the notice recipient to distribute the public notice to other persons served, using the standard language under subrule (4)(c) of this rule, where applicable.
(2) All of the following elements shall be included in the public notice for public water systems operating under a variance or exemption:
(a) If a public water system has been granted a variance or an exemption, the public notice shall contain all of the following elements:
(i) An explanation of the reasons for the variance or exemption.
(ii) The date on which the variance or exemption was issued.
(iii) A brief status report on the steps the supplier is taking to install treatment, find alternative sources of water, or otherwise comply with the terms and schedules of the variance or exemption.
(iv) A notice of opportunities for public input in the review of the variance or exemption.
(b) If a public water system violates the conditions of a variance or exemption, the public notice shall contain the 10 elements listed in subrule (1) of this rule.
(3) The public notice shall be presented as specified in this subrule.
(a) Each public notice required by this part shall meet all of the following criteria:
(i) Shall be displayed in a conspicuous way when printed or posted.
(ii) Shall not contain overly technical language or very small print.
(iii) Shall not be formatted in a way that defeats the purpose of the notice.
(iv) Shall not contain language which nullifies the purpose of the notice.
(b) In communities where more than 10% of the consumers are non-English speaking consumers, the public notice shall contain information in the appropriate language or languages regarding the importance of the notice or contain a telephone number or address where persons served may contact the supplier to obtain a translated copy of the notice or to request assistance in the appropriate language.
(4) Suppliers shall include the following standard language in their public notice:
(a) Suppliers shall include in each public notice the health effects language specified in table 1 of this rule corresponding to each MCL, MRDL, and treatment technique violation listed in table 1 of R 325.10401a, and for each violation of a condition of a variance or exemption.
(b) Suppliers shall include the following language in their notice, including the language necessary to fill in the blanks, for all monitoring and testing procedure violations listed in table 1 of R 325.10401a:
"We are required to monitor your drinking water for specific contaminants on a regular basis. Results of regular monitoring are an indicator of whether or not your drinking water meets health standards. During [compliance period], we 'did not monitor or test' or 'did not complete all monitoring or testing' for [contaminant or contaminants], and therefore cannot be sure of the quality of your drinking water during that time."
(c) Suppliers shall include in their notice the following language, where applicable, to encourage the distribution of the public notice to all persons served:
"Please share this information with all the other people who drink this water, especially those who may not have received this notice directly (for example, people in apartments, nursing homes, schools, and businesses). You can do this by posting this notice in a public place or distributing copies by hand or mail."

Table 1 Regulated contaminants

Key

AL=Action level

MCL=Maximum contaminant level

MCLG=Maximum contaminant level goal

mfl=Million fibers per liter

MRDL=Maximum residual disinfectant level

MRDLG=Maximum residual disinfectant level goal

mrem/year=Millirems per year (a measure of radiation absorbed by the body)

N/A=Not applicable

ntu=Nephelometric turbidity units (a measure of water clarity)

pci/l=Picocuries per liter (a measure of radioactivity)

ppm=Parts per million, or milligrams per liter (mg/l)

ppb=Parts per billion, or micrograms per liter (µg/l)

ppt=Parts per trillion, or nanograms per liter

ppq=Parts per quadrillion, or picograms per liter

TT=Treatment technique

Contaminant in CCR units	Traditional MCL in mg/l	To convert for CCR, multiply by	MCL in CCR units	MCLG in CCR units	Major sources in drinking water	Health effects language
Microbiological contaminants						
Total coliform bacteria	MCL: For water systems analyzing 40 or more samples per month, not more than 5.0% of the monthly samples may be positive for total coliform. For systems analyzing fewer than 40 samples per month, not more than 1 sample per month may be positive for total coliform.			zero	Naturally present in the environment	Coliforms are bacteria that are naturally present in the environment and are used as an indicator that other, potentially-harmful, bacteria may be present. Coliforms were found in more samples than allowed and this was a warning of potential problems.
Fecal coliform and E. coli	zero	No conversion necessary	zero	zero	Human and animal fecal waste	Fecal coliforms and E. coli are bacteria whose presence indicates that the water may be contaminated with human or animal wastes. Microbes in these wastes can cause short-term effects, such as diarrhea, cramps, nausea, headaches, or other symptoms. They may pose a special health risk for infants, young children, some of the elderly, and people with severely compromised immune systems.

Contaminant in CCR units	Traditional MCL in mg/l	To convert for CCR, multiply by	MCL in CCR units	MCLG in CCR units	Major sources in drinking water	Health effects language
Turbidity (ntu)	TT*	No conversion necessary	TT*	N/A	Soil runoff	Turbidity has no health effects. However, turbidity can interfere with disinfection and provide a medium for microbial growth. Turbidity may indicate the presence of disease-causing organisms. These organisms include bacteria, viruses, and parasites that can cause symptoms such as nausea, cramps, diarrhea and associated headaches.
	* R 325.10611b sets turbidity standards for different types of systems.					
Other microbiological contaminants						
Giardia lamblia, viruses, heterotrophic plate count (HPC) bacteria, legionella, cryptosporidium	TT*	No conversion necessary	TT*	zero	Naturally present in the environment	Inadequately treated water may contain disease-causing organisms. These organisms include bacteria, viruses, and parasites which can cause symptoms such as nausea, cramps, diarrhea, and associated headaches.
	* The treatment technique violations that involve turbidity exceedances may use health effects language for turbidity instead.					
INORGANIC CONTAMINANTS						
Antimony (ppb)	0.006	1000	6	6	Discharge from petroleum refineries; fire retardants; ceramics; electronics; solder	Some people who drink water containing antimony well in excess of the MCL over many years could experience increases in blood cholesterol and decreases in blood sugar.
Arsenic (ppb)	0.05	1000	50	N/A	Erosion of natural deposits; runoff from orchards; runoff from glass and electronics production wastes	Some people who drink water containing arsenic in excess of the MCL over many years could experience skin damage or problems with their circulatory system, and may have an increased risk of getting cancer.
Asbestos [fibers longer than 10 µm] (mfl)	7 mfl	No conversion necessary	7	7	Decay of asbestos cement water mains; erosion of natural deposits	Some people who drink water containing asbestos in excess of the MCL over many years may have an increased risk of developing benign intestinal polyps.

Contaminant in CCR units	Traditional MCL in mg/l	To convert for CCR, multiply by	MCL in CCR units	MCLG in CCR units	Major sources in drinking water	Health effects language
Barium (ppm)	2	No conversion necessary	2	2	Discharge of drilling wastes; discharge from metal refineries; erosion of natural deposits	Some people who drink water containing barium in excess of the MCL over many years could experience an increase in their blood pressure.
Beryllium (ppb)	0.004	1000	4	4	Discharge from metal refineries and coal-burning factories; discharge from electrical, aerospace, and defense industries	Some people who drink water containing beryllium well in excess of the MCL over many years could develop intestinal lesions.
Cadmium (ppb)	0.005	1000	5	5	Corrosion of galvanized pipes; erosion of natural deposits; discharge from metal refineries; runoff from waste batteries and paints	Some people who drink water containing cadmium in excess of the MCL over many years could experience kidney damage.
Chromium [total] (ppb)	0.1	1000	100	100	Discharge from steel and pulp mills; erosion of natural deposits	Some people who use water containing chromium well in excess of the MCL over many years could experience allergic dermatitis.
Cyanide [free] (ppb)	0.2	1000	200	200	Discharge from steel/metal factories; discharge from plastic and fertilizer factories	Some people who drink water containing cyanide well in excess of the MCL over many years could experience nerve damage or problems with their thyroid.
Fluoride (ppm)	4	No conversion necessary	4	4	Erosion of natural deposits; water additive that promotes strong teeth; discharge from fertilizer and aluminum factories	Some people who drink water containing fluoride in excess of the MCL over many years could get bone disease, including pain and tenderness of the bones. Fluoride in drinking water at half the MCL or more may cause mottling of children's teeth, usually in children less than 9 years old. Mottling, also known as dental fluorosis, may include brown staining and/or pitting of the teeth, and occurs only in developing teeth before they erupt from the gums.
Mercury [inorganic] (ppb)	0.002	1000	2	2	Erosion of natural deposits; discharge from refineries and factories; runoff from landfills; runoff from cropland	Some people who drink water containing inorganic mercury well in excess of the MCL over many years could experience kidney damage.

Contaminant in CCR units	Traditional MCL in mg/l	To convert for CCR, multiply by	MCL in CCR units	MCLG in CCR units	Major sources in drinking water	Health effects language
Nitrate [as nitrogen] (ppm)	10	No conversion necessary	10	10	Runoff from fertilizer use; leaching from septic tanks, sewage; erosion of natural deposits	Infants below the age of 6 months who drink water containing nitrate in excess of the MCL could become seriously ill and, if untreated, may die. Symptoms include shortness of breath and blue baby syndrome.
Nitrite [as nitrogen] (ppm)	1	No conversion necessary	1	1	Runoff from fertilizer use; leaching from septic tanks, sewage; erosion of natural deposits	Infants below the age of 6 months who drink water containing nitrite in excess of the MCL could become seriously ill and, if untreated, may die. Symptoms include shortness of breath and blue baby syndrome.
Total nitrate and nitrite [as nitrogen] (ppm)	10	No conversion necessary	10	10	Runoff from fertilizer use; leaching from septic tanks, sewage; erosion of natural deposits	Infants below the age of 6 months who drink water containing nitrate and nitrite in excess of the MCL could become seriously ill and, if untreated, may die. Symptoms include shortness of breath and blue baby syndrome.
Selenium (ppb)	0.05	1000	50	50	Discharge from petroleum and metal refineries; erosion of natural deposits; discharge from mines	Selenium is an essential nutrient. However, some people who drink water containing selenium in excess of the MCL over many years could experience hair or fingernail losses, numbness in fingers or toes, or problems with their circulation.
Thallium (ppb)	0.002	1000	2	0.5	Leaching from ore-processing sites; discharge from electronics, glass, and drug factories	Some people who drink water containing thallium in excess of the MCL over many years could experience hair loss, changes in their blood, or problems with their kidneys, intestines, or liver.
Lead and copper rule						
Lead (ppb)	AL=0.015	1000	AL=15 (TT)	zero	Corrosion of household plumbing systems; erosion of natural deposits	Infants and children who drink water containing lead in excess of the action level could experience delays in their physical or mental development. children could show slight deficits in attention span and learning abilities. adults who drink this water over many years could develop kidney problems or high blood pressure.

Contaminant in CCR units	Traditional MCL in mg/l	To convert for CCR, multiply by	MCL in CCR units	MCLG in CCR units	Major sources in drinking water	Health effects language
Copper (ppm)	AL=1.3	No conversion necessary	AL=1.3 (TT)	1.3	Corrosion of household plumbing systems; erosion of natural deposits	Copper is an essential nutrient, but some people who drink water containing copper in excess of the action level over a relatively short amount of time could experience gastrointestinal distress. Some people who drink water containing copper in excess of the action level over many years could suffer liver or kidney damage. People with Wilson's disease should consult their personal doctor.
Synthetic organic contaminants including pesticides and herbicides						
2,4-D (ppb)	0.07	1000	70	70	Runoff from herbicide used on row crops	Some people who drink water containing the weed killer 2,4-d well in excess of the MCL over many years could experience problems with their kidneys, liver, or adrenal glands.
2,4,5-TP [silvex] (ppb)	0.05	1000	50	50	Residue of banned herbicide	Some people who drink water containing silvex in excess of the MCL over many years could experience liver problems.
Alachlor (ppb)	0.002	1000	2	zero	Runoff from herbicide used on row crops	Some people who drink water containing alachlor in excess of the MCL over many years could have problems with their eyes, liver, kidneys, or spleen, or experience anemia, and may have an increased risk of getting cancer.
Atrazine (ppb)	0.003	1000	3	3	Runoff from herbicide used on row crops	Some people who drink water containing atrazine well in excess of the MCL over many years could experience problems with their cardiovascular system or reproductive difficulties.
Benzo(a)pyrene [PAHs] (ppt)	0.0002	1,000,000	200	zero	Leaching from linings of water storage tanks and distribution lines	Some people who drink water containing benzo(a)pyrene in excess of the MCL over many years may experience reproductive difficulties and may have an increased risk of getting cancer.
Carbofuran (ppb)	0.04	1000	40	40	Leaching of soil fumigant used on rice and alfalfa	Some people who drink water containing carbofuran in excess of the MCL over many years could experience problems with their blood, or nervous or reproductive systems.
Chlordane (ppb)	0.002	1000	2	zero	Residue of banned termiticide	Some people who drink water containing chlordane in excess of the mcl over many years could experience problems with their liver or nervous system, and may have an increased risk of getting cancer.

Contaminant in CCR units	Traditional MCL in mg/l	To convert for CCR, multiply by	MCL in CCR units	MCLG in CCR units	Major sources in drinking water	Health effects language
Dalapon (ppb)	0.2	1000	200	200	Runoff from herbicide used on rights of way	Some people who drink water containing dalapon well in excess of the MCL over many years could experience minor kidney changes.
Di(2-ethylhexyl) adipate (ppb)	0.4	1000	400	400	Discharge from chemical factories	Some people who drink water containing di (2-ethylhexyl) adipate well in excess of the MCL over many years could experience toxic effects such as weight loss, liver enlargement or possible reproductive difficulties.
Di(2-ethylhexyl) phthalate (ppb)	0.006	1000	6	zero	Discharge from rubber and chemical factories	Some people who drink water containing di (2-ethylhexyl) phthalate well in excess of the MCL over many years may have problems with their liver, or experience reproductive difficulties, and may have an increased risk of getting cancer.
Dibromochloropropane [DBCP] (ppt)	0.0002	1,000,000	200	zero	Runoff/leaching from soil fumigant used on soybeans, cotton, pineapples, and orchards	Some people who drink water containing DBCP in excess of the MCL over many years could experience reproductive difficulties and may have an increased risk of getting cancer.
Dinoseb (ppb)	0.007	1000	7	7	Runoff from herbicide used on soybeans and vegetables	Some people who drink water containing dinoseb well in excess of the MCL over many years could experience reproductive difficulties.
Dioxin [2,3,7,8-TCDD] (ppq)	0.00000003	1,000,000,000	30	zero	Emissions from waste incineration and other combustion; discharge from chemical factories	Some people who drink water containing dioxin in excess of the MCL over many years could experience reproductive difficulties and may have an increased risk of getting cancer.
Diquat (ppb)	0.02	1000	20	20	Runoff from herbicide use	Some people who drink water containing diquat in excess of the MCL over many years could get cataracts.
Endothall (ppb)	0.1	1000	100	100	Runoff from herbicide use	Some people who drink water containing endothall in excess of the MCL over many years could experience problems with their stomach or intestines.
Endrin (ppb)	0.002	1000	2	2	Residue of banned insecticide	Some people who drink water containing endrin in excess of the MCL over many years could experience liver problems.
Ethylene dibromide (ppt)	0.00005	1,000,000	50	zero	Discharge from petroleum refineries	Some people who drink water containing ethylene dibromide in excess of the MCL over many years could experience problems with their liver, stomach, reproductive system, or kidneys, and may have an increased risk of getting cancer.

Contaminant in CCR units	Traditional MCL in mg/l	To convert for CCR, multiply by	MCL in CCR units	MCLG in CCR units	Major sources in drinking water	Health effects language
Glyphosate (ppb)	0.7	1000	700	700	Runoff from herbicide use	Some people who drink water containing glyphosate in excess of the MCL over many years could experience problems with their kidneys or reproductive difficulties.
Heptachlor (ppt)	0.0004	1,000,000	400	zero	Residue of banned pesticide	Some people who drink water containing heptachlor in excess of the MCL over many years could experience liver damage and may have an increased risk of getting cancer.
Heptachlor epoxide (ppt)	0.0002	1,000,000	200	zero	Breakdown of heptachlor	Some people who drink water containing heptachlor epoxide in excess of the MCL over many years could experience liver damage, and may have an increased risk of getting cancer.
Hexachlorobenzene (ppb)	0.001	1000	1	zero	Discharge from metal refineries and agricultural chemical factories	Some people who drink water containing hexachlorobenzene in excess of the MCL over many years could experience problems with their liver or kidneys, or adverse reproductive effects, and may have an increased risk of getting cancer.
Hexachlorocyclopentadiene (ppb)	0.05	1000	50	50	Discharge from chemical factories	Some people who drink water containing hexachlorocyclopentadiene well in excess of the MCL over many years could experience problems with their kidneys or stomach.
lindane (ppt)	0.0002	1,000,000	200	200	Runoff/leaching from insecticide used on cattle, lumber, gardens	Some people who drink water containing lindane in excess of the MCL over many years could experience problems with their kidneys or liver.
Methoxychlor (ppb)	0.04	1000	40	40	Runoff/leaching from insecticide used on fruits, vegetables, alfalfa, livestock	Some people who drink water containing methoxychlor in excess of the MCL over many years could experience reproductive difficulties.
Oxamyl [vydate] (ppb)	0.2	1000	200	200	Runoff/leaching from insecticide used on apples, potatoes and tomatoes	Some people who drink water containing oxamyl in excess of the MCL over many years could experience slight nervous system effects.
Pentachlorophenol (ppb)	0.001	1000	1	zero	Discharge from wood preserving factories	Some people who drink water containing pentachlorophenol in excess of the MCL over many years could experience problems with their liver or kidneys, and may have an increased risk of getting cancer.

Contaminant in CCR units	Traditional MCL in mg/l	To convert for CCR, multiply by	MCL in CCR units	MCLG in CCR units	Major sources in drinking water	Health effects language
Picloram (ppb)	0.5	1000	500	500	Herbicide runoff	Some people who drink water containing picloram in excess of the MCL over many years could experience problems with their liver.
Polychlorinated biphenyls [PCBs] (ppt)	0.0005	1,000,000	500	zero	Runoff from landfills; discharge of waste chemicals	Some people who drink water containing PCBs in excess of the MCL over many years could experience changes in their skin, problems with their thymus gland, immune deficiencies, or reproductive or nervous system difficulties, and may have an increased risk of getting cancer.
Simazine (ppb)	0.004	1000	4	4	Herbicide runoff	Some people who drink water containing simazine in excess of the MCL over many years could experience problems with their blood.
Toxaphene (ppb)	0.003	1000	3	zero	Runoff/leaching from insecticide used on cotton and cattle	Some people who drink water containing toxaphene in excess of the MCL over many years could have problems with their kidneys, liver, or thyroid, and may have an increased risk of getting cancer.
Volatile organic contaminants						
Benzene (ppb)	0.005	1000	5	zero	Discharge from factories; leaching from gas storage tanks and landfills	Some people who drink water containing benzene in excess of the MCL over many years could experience anemia or a decrease in blood platelets, and may have an increased risk of getting cancer.
Carbon tetrachloride (ppb)	0.005	1000	5	zero	Discharge from chemical plants and other industrial activities	Some people who drink water containing carbon tetrachloride in excess of the MCL over many years could experience problems with their liver and may have an increased risk of getting cancer.
Chlorobenzene (ppb)	0.1	1000	100	100	Discharge from chemical and agricultural chemical factories	Some people who drink water containing chlorobenzene in excess of the MCL over many years could experience problems with their liver or kidneys.
O-dichlorobenzene (ppb)	0.6	1000	600	600	Discharge from industrial chemical factories	Some people who drink water containing o-dichlorobenzene well in excess of the Mcl over many years could experience problems with their liver, kidneys, or circulatory systems.
P-dichlorobenzene (ppb)	0.075	1000	75	75	Discharge from industrial chemical factories	Some people who drink water containing p-dichlorobenzene in excess of the Mcl over many years could experience anemia, damage to their liver, kidneys, or spleen, or changes in their blood.

Contaminant in CCR units	Traditional MCL in mg/l	To convert for CCR, multiply by	MCL in CCR units	MCLG in CCR units	Major sources in drinking water	Health effects language
1,2-dichloroethane (ppb)	0.005	1000	5	zero	Discharge from industrial chemical factories	Some people who drink water containing 1,2-dichloroethane in excess of the MCL over many years may have an increased risk of getting cancer.
1,1-dichloroethylene (ppb)	0.007	1000	7	7	Discharge from industrial chemical factories	Some people who drink water containing 1,1-dichloroethylene in excess of the MCL over many years could experience problems with their liver.
Cis-1,2-dichloroethylene (ppb)	0.07	1000	70	70	Discharge from industrial chemical factories	Some people who drink water containing cis-1,2-dichloroethylene in excess of the MCL over many years could experience problems with their liver.
Trans-1,2-dichloroethylene (ppb)	0.1	1000	100	100	Discharge from industrial chemical factories	Some people who drink water containing trans-1,2-dichloroethylene well in excess of the MCL over many years could experience problems with their liver.
Dichloromethane (ppb)	0.005	1000	5	zero	Discharge from pharmaceutical and chemical factories	Some people who drink water containing dichloromethane in excess of the MCL over many years could have liver problems and may have an increased risk of getting cancer.
1,2-dichloropropane (ppb)	0.005	1000	5	zero	Discharge from industrial chemical factories	Some people who drink water containing 1,2-dichloropropane in excess of the MCL over many years may have an increased risk of getting cancer.
Ethylbenzene (ppb)	0.7	1000	700	700	Discharge from petroleum refineries	Some people who drink water containing ethylbenzene well in excess of the MCL over many years could experience problems with their liver or kidneys.
Styrene (ppb)	0.1	1000	100	100	Discharge from rubber and plastic factories; leaching from landfills	Some people who drink water containing styrene well in excess of the MCL over many years could have problems with their liver, kidneys, or circulatory system.
Tetrachloro-ethylene (ppb)	0.005	1000	5	Zero	Discharge from factories and dry cleaners	Some people who drink water containing tetrachloroethylene in excess of the MCL over many years could have problems with their liver, and may have an increased risk of getting cancer.
Toluene (ppm)	1	No conversion necessary	1	1	Discharge from petroleum factories	Some people who drink water containing toluene well in excess of the MCL over many years could have problems with their nervous system, kidneys, or liver.
1,2,4-trichlorobenzene (ppb)	0.07	1000	70	70	Discharge from textile-finishing factories	Some people who drink water containing 1,2,4-trichlorobenzene well in excess of the MCL over many years could experience changes in their adrenal glands.

Contaminant in CCR units	Traditional MCL in mg/l	To convert for CCR, multiply by	MCL in CCR units	MCLG in CCR units	Major sources in drinking water	Health effects language
1,1,1-trichloroethane (ppb)	0.2	1000	200	200	Discharge from metal degreasing sites and other factories	Some people who drink water containing 1,1,1-trichloroethane in excess of the MCL over many years could experience problems with their liver, nervous system, or circulatory system.
1,1,2-trichloroethane (ppb)	0.005	1000	5	3	Discharge from industrial chemical factories	Some people who drink water containing 1,1,2-trichloroethane well in excess of the MCL over many years could have problems with their liver, kidneys, or immune systems.
Trichloroethylene (ppb)	0.005	1000	5	zero	Discharge from metal degreasing sites and other factories	Some people who drink water containing trichloroethylene in excess of the MCL over many years could experience problems with their liver and may have an increased risk of getting cancer.
Vinyl chloride (ppb)	0.002	1000	2	zero	Leaching from PVC piping; discharge from plastics factories	Some people who drink water containing vinyl chloride in excess of the MCL over many years may have an increased risk of getting cancer.
Xylenes [total] (ppm)	10	No conversion necessary	10	10	Discharge from petroleum factories; discharge from chemical factories	Some people who drink water containing xylenes in excess of the MCL over many years could experience damage to their nervous system.
Radioactive contaminants						
Beta/photon emitters (mrem/yr)	4	No conversion necessary	4	zero	Decay of natural and man-made deposits	Certain minerals are radioactive and may emit forms of radiation known as photons and beta radiation. Some people who drink water containing beta particle and photon radioactivity in excess of the MCL over many years may have an increased risk of getting cancer.
Alpha emitters [gross alpha] (pci/l)	15	No conversion necessary	15	zero	Erosion of natural deposits	Certain minerals are radioactive and may emit a form of radiation known as alpha radiation. Some people who drink water containing alpha emitters in excess of the MCL over many years may have an increased risk of getting cancer.
Combined radium (pci/l)	5	No conversion necessary	5	zero	Erosion of natural deposits	Some people who drink water containing radium 226 or 228 in excess of the MCL over many years may have an increased risk of getting cancer.
Disinfection byproducts (DBPs), byproduct precursors, and disinfectant residuals: where disinfection is used in the treatment of drinking water, disinfectants combine with organic and inorganic matter present in water to form chemicals called disinfection byproducts (DBPs). The department sets standards for controlling the levels of disinfectants and DBPs in drinking water, including trihalomethanes (THMs) and haloacetic acids (HAAs). See R 325.10610, R 325.10610a, and R 325.10719e for disinfection byproduct MCLs, disinfectant MRDLs, and related monitoring requirements.						

Contaminant in CCR units	Traditional MCL in mg/l	To convert for CCR, multiply by	MCL in CCR units	MCLG in CCR units	Major sources in drinking water	Health effects language
Total trihalomethanes [TTHMs] (ppb)	0.10/ 0.080*	1000	100/80*	N/A	By-product of drinking water chlorination	Some people who drink water containing trihalomethanes in excess of the MCL over many years may experience problems with their liver, kidneys, or central nervous system, and may have an increased risk of getting cancer.
	* The MCL for total trihalomethanes is the sum of the concentrations of the individual trihalomethanes. Different MCLs for TTHMs apply to different types of systems. See the footnote in R 325.10610(1).					
Haloacetic acids (HAAs) (ppb)	0.060*	1000	60*	N/A	By-product of drinking water disinfection	Some people who drink water containing haloacetic acids in excess of the MCL over many years may have an increased risk of getting cancer.
	* The MCL for haloacetic acids is the sum of the concentrations of the individual haloacetic acids.					
Bromate (ppb)	0.010	1000	10	zero	By-product of drinking water chlorination	Some people who drink water containing bromate in excess of the MCL over many years may have an increased risk of getting cancer.
Chloramines (ppm)	MRDL = 4	No conversion necessary	MRDL = 4	MRDLG = 4	Water additive used to control microbes	Some people who use water containing chloramines well in excess of the MRDL could experience irritating effects to their eyes and nose. Some people who drink water containing chloramines well in excess of the MRDL could experience stomach discomfort or anemia.
Chlorine (ppm)	MRDL = 4	No conversion necessary	MRDL = 4	MRDLG = 4	Water additive used to control microbes	Some people who use water containing chlorine well in excess of the MRDL could experience irritating effects to their eyes and nose. Some people who drink water containing chlorine well in excess of the MRDL could experience stomach discomfort.
Chlorite (ppm)	1	No conversion necessary	1	0.8	By-product of drinking water chlorination	Some infants and young children who drink water containing chlorite in excess of the MCL could experience nervous system effects. Similar effects may occur in fetuses of pregnant women who drink water containing chlorite in excess of the MCL. Some people may experience anemia.
Chlorine dioxide (ppb)	MRDL = 0.8	1000	MRDL = 800	MRDLG = 800	Water additive used to control microbes	Some infants and young children who drink water containing chlorine dioxide in excess of the MRDL could experience nervous system effects. Similar effects may occur in fetuses of pregnant women who drink water containing chlorine dioxide in excess of the MRDL. Some people may experience anemia.

Contaminant in CCR units	Traditional MCL in mg/l	To convert for CCR, multiply by	MCL in CCR units	MCLG in CCR units	Major sources in drinking water	Health effects language
	Add the following only to public notification where any 2 consecutive daily samples taken at the entrance to the distribution system are above the MRDL: "The chlorine dioxide violations reported today are the result of exceedances at the treatment facility only, not within the distribution system which delivers water to consumers. Continued compliance with chlorine dioxide levels within the distribution system minimizes the potential risk of these violations to consumers." Add the following only to public notification where one or more distribution system samples are above the MRDL: "The chlorine dioxide violations reported today include exceedances of the drinking water standard within the distribution system which delivers water to consumers. Violations of the chlorine dioxide standard within the distribution system may harm human health based on short-term exposures. Certain groups, including fetuses, infants, and young children, may be especially susceptible to nervous system effects from excessive chlorine dioxide exposure."					
Total organic carbon [TOC - control of DBP precursors] (ppm)	TT	No conversion necessary	TT	None	Naturally present in the environment	Total organic carbon (TOC) has no health effects. However, total organic carbon provides a medium for the formation of disinfection byproducts. These byproducts include trihalomethanes (THMs) and haloacetic acids (HAAs). Drinking water containing these byproducts in excess of the MCL may lead to adverse health effects, liver or kidney problems, or nervous system effects, and may lead to an increased risk of getting cancer.
Other Treatment Techniques						
Acrylamide	TT	No conversion necessary	TT	zero	Added to water during sewage/ wastewater treatment	Some people who drink water containing high levels of acrylamide over a long period of time could have problems with their nervous system or blood, and may have an increased risk of getting cancer.
Epichlorohydrin	TT	No conversion necessary	TT	zero	Discharge from industrial chemical factories; an impurity of some water treatment chemicals	Some people who drink water containing high levels of epichlorohydrin over a long period of time could experience stomach problems, and may have an increased risk of getting cancer.

History: 1954 ACS 94, Eff. Jan. 12, 1978; 1979 AC; 1989 MR 8, Eff. Sept. 13, 1989; 2003 MR 2, Eff. Jan. 29, 2003.

R 325.10406 Notice to new billing units or new customers.
Rule 406. (1) Suppliers of community water systems shall give a copy of the most recent public notice for continuing violations, the existence of a variance or exemption, or other ongoing situations requiring a public notice to all new billing units or new customers before or at the time service begins.
(2) Suppliers of noncommunity water systems shall continuously post the public notice in conspicuous locations in order to inform new consumers of continuing violations, variance or exemption, or other situation requiring a public notice for as long as the violation, variance, exemption, or other situation exists.
History: 1954 ACS 94, Eff. Jan. 12, 1978; 1979 AC; 1989 MR 8, Eff. Sept. 13, 1989; 2003 MR 2, Eff. Jan. 29, 2003.

R 325.10407 Special notice of the availability of unregulated contaminant monitoring results.
Rule 407. (1) The supplier of a community water system or nontransient, noncommunity water system required to monitor under R 325.10717b(1) shall notify persons served by the system of the availability of the results of such sampling not later than 12 months after the monitoring results are known.
(2) The form and manner of the public notice shall follow the requirements for a tier 3 public notice under R 325.10404(3), (4)(a) and (c). The notice shall also identify a person and provide the telephone number to contact for information on the monitoring results.
History: 1954 ACS 94, Eff. Jan. 12, 1978; 1979 AC; 1989 MR 8, Eff. Sept. 13, 1989; 1994 MR 12, Eff. Jan. 5, 1995; 2003 MR 2, Eff. Jan. 29, 2003.

R 325.10408 Periodic progress reports; correction of violations and notification of customers.
Rule 408. The department may require a supplier of a public water system to submit periodic reports on progress being made to correct a violation of an MCL, order, or a variance or exemption, and to notify the persons served by the system of that progress.
History: 1954 ACS 94, Eff. Jan. 12, 1978; 1979 AC; 2003 MR 2, Eff. Jan. 29, 2003.

R 325.10408a Special notice when fluoride level is above 2 mg/l.
Rule 408a. (1) Suppliers of community water systems that measure fluoride above 2 mg/l as determined by the last single sample taken under R 325.10710, but do not exceed the maximum contaminant level (MCL) of 4 mg/l for fluoride under R 325.10604c, shall provide the public notice in subrule (3) of this rule to persons served. Public notice shall be provided as soon as practical but not later than that of a tier 3 public notice under R 325.10404(2)(a). A copy of the notice shall also be sent to all new billing units and new customers under R 325.10406(1) and to the local health department. The department may, on a case-by-case basis, in the best interest of health, safety, welfare, and the environment, require an initial notice sooner than 12 months or applicable repeat notices more frequently than annually, or both.
(2) The form and manner of the public notice, including repeat notices, shall follow the requirements for a tier 3 public notice in R 325.10404(3) and (4)(a) and (4)(c).
(3) The notice shall contain the following language, including the language necessary to fill in the blanks:
"This is an alert about your drinking water and a cosmetic dental problem that might affect children under 9 years of age. At low levels, fluoride can help prevent cavities, but children drinking water containing more than 2 milligrams per liter (mg/l) of fluoride may develop cosmetic discoloration of their permanent teeth (dental fluorosis). The drinking water provided by your community water system [name] has a fluoride concentration of [insert value] mg/l.
Dental fluorosis, in its moderate or severe forms, may result in a brown staining and/or pitting of the permanent teeth. This problem occurs only in developing teeth, before they erupt from the gums. Children under 9 should be provided with alternative sources of drinking water or water that has been treated to remove the fluoride to avoid the possibility of staining and pitting of their permanent teeth. You may also want to contact your dentist about proper use by young children of fluoride-containing products. Older children and adults may safely drink the water.
Drinking water containing more than 4 mg/l of fluoride (the U.S. Environmental Protection Agency's drinking water standard) can increase your risk of developing bone disease. Your drinking water does not contain more than 4 mg/l of fluoride, but we're required to notify you when we discover that the fluoride levels in your drinking water exceed 2 mg/l because of this cosmetic dental problem.
For more information, please call [name of water system contact] of [name of community water system] at [phone number]. Some home water treatment units are also available to remove fluoride from drinking water. To learn more about available home water treatment units, you may call NSF International at 1-877-8-NSF-HELP."
History: 2003 MR 2, Eff. Jan. 29, 2003.

R 325.10408b Special notice for nitrate exceedances above MCL by noncommunity water systems (NCWS), when granted permission by the department.

Rule 408b. (1) The supplier of a noncommunity water system granted permission by the department under R 325.10604c(6) to exceed the nitrate MCL shall provide notice to persons served according to the requirements for a tier 1 notice under R 325.10402(1) and (2).
(2) Noncommunity water systems granted permission by the department to exceed the nitrate mcl under R 325.10604c(6) shall provide continuous posting of the fact that nitrate levels exceed 10 mg/l and the potential health effects of exposure, according to the requirements for tier 1 notice delivery under R 325.10402(3) and the content requirements under R 325.10405.
History: 2003 MR 2, Eff. Jan. 29, 2003.

R 325.10409 Notice by department on behalf of the public water system.
Rule 409. (1) The department may give the notice required by this part on behalf of the supplier of the public water system if the department complies with the requirements of this part and may charge costs incurred by the department to the owner of the public water supply.
(2) The supplier of the public water system shall ensure that the requirements of this part are met.
History: 1954 ACS 94, Eff. Jan. 12, 1978; 1979 AC; 1989 MR 8, Eff. Sept. 13, 1989; 2003 MR 2, Eff. Jan. 29, 2003.

R 325.10410
Source: 2002 AACS.

R 325.10411 Annual consumer confidence reporting; purpose; applicability.
Rule 411. (1) R 325.10411 to R 325.10415 establish the minimum requirements for the content, recordkeeping, and delivery of annual consumer confidence reports that suppliers of community water systems shall prepare and deliver to their customers. These reports shall contain information on the quality of the water delivered by the suppliers and characterize the risks, if any, from exposure to contaminants detected in the drinking water in an accurate and understandable manner.
(2) R 325.10411 to R 325.10415 apply only to community supplies.
(3) For the purpose of R 325.10411 to R 325.10415, "report" means annual consumer confidence report.
(4) For the purpose of R 325.10411 to R 325.10415, "customers" are defined as billing units or service connections to which water is delivered by the supplier of a community water system.
(5) For the purpose of R 325.10411 to R 325.10420, "detected" means at or above the levels prescribed by R 325.10605.
History: 2001 MR 9, Eff. May 17, 2001; 2003 MR 2, Eff. Jan. 29, 2003.

R 325.10412 Annual consumer confidence reporting; effective dates.
Rule 412. (1) The supplier of each existing community water system shall deliver its report by July 1 annually. Each report shall contain data collected during, or before, the previous calendar year.
(2) The supplier of a new community water system shall deliver its first report by July 1 of the year after its first full calendar year in operation and then by July 1 annually.
(3) The supplier of a community water system that sells water to another community water system shall deliver the applicable information required in R 325.10413 to the buyer system by either of the following dates:
(a) April 1 annually.
(b) A date mutually agreed upon by the seller and the purchaser, and specifically included in a contract between the parties.
History: 2001 MR 9, Eff. May 17, 2001; 2003 MR 2, Eff. Jan. 29, 2003.

R 325.10413 Annual consumer confidence reporting; content of reports.
Rule 413. (1) The supplier of each community water system shall provide to its customers an annual report that contains the information specified in this rule and the information specified in R 325.10414.
(2) Each report shall identify the source or sources of the water delivered by the community water system by providing information on both of the following:
(a) The type of the water; for example, surface water or ground water.
(b) The commonly used name, if any, and location of the body or bodies of water.
(3) If a source water assessment has been completed, then the report shall notify consumers of the availability of the information and the means to obtain it. In addition, a community supply is encouraged to highlight in the report significant sources of contamination in the source water area if the supply has readily available information. If a supplier has received a source water assessment from the department, then the report shall include a brief summary of the system's susceptibility to potential sources of contamination, using language provided by the department or written by the operator.
(4) Each report shall include both of the following definitions:
(a) "Maximum Contaminant Level Goal" or "MCLG" means the level of a contaminant in drinking water below which there is no known or expected risk to health. MCLGs allow for a margin of safety.

(b) "Maximum Contaminant Level" or "MCL" means the highest level of a contaminant that is allowed in drinking water. MCLs are set as close to the MCLGs as feasible using the best available treatment technology.
(5) A report for a community water system operating under a variance or an exemption issued under section 20 of the act shall include the definition for variances and exemptions. "Variances and exemptions" means state or EPA permission not to meet an MCL or a treatment technique under certain conditions.
(6) A report that contains data on regulated contaminants using any of the following terms shall include the applicable definitions:
(a) "Treatment technique" or "TT" means a required process intended to reduce the level of a contaminant in drinking water.
(b) "Action level" or "AL" means the concentration of a contaminant that, if exceeded, triggers treatment or other requirements that a water supply shall follow.
(c) "Maximum residual disinfectant level goal" or "MRDLG" means the level of a drinking water disinfectant below which there is no known or expected risk to health. MRDLGs do not reflect the benefits of the use of disinfectants to control microbial contaminants.
(d) "Maximum residual disinfectant level" or "MRDL" means the highest level of a disinfectant allowed in drinking water. There is convincing evidence that addition of a disinfectant is necessary for control of microbial contaminants.
(7) The report shall include all of the following information on detected contaminants subject to mandatory monitoring, except Cryptosporidium:
(a) This subrule applies to all of the following contaminants:
(i) Contaminants subject to an MCL, action level, maximum residual disinfectant level, or treatment technique known as regulated contaminants.
(ii) Contaminants for which monitoring is required by R 325.10717b(1) known as unregulated contaminants.
(iii) Disinfection by-products or microbial contaminants for which monitoring is required by 40 C.F.R. §§141.142 and 141.143, except as provided under subrule (8)(a) of this rule, and which are detected in the finished water.
(b) The data relating to the contaminants specified in this subrule shall be displayed in 1 table or in several adjacent tables. Any additional monitoring results that a community supply chooses to include in its report shall be displayed separately.
(c) The data shall be derived from data collected to comply with EPA and state monitoring and analytical requirements during the previous calendar year with the following exceptions:
(i) If a supplier is allowed to monitor for regulated contaminants less often than once a year, then the table or tables shall include the date and results of the most recent sampling and the report shall include a brief statement indicating that the data presented in the report are from the most recent testing done in accordance with the regulations. Data older than 5 years need not be included.
(ii) Results of monitoring in compliance with 40 C.F.R. §§141.142 and 141.143 need only be included for 5 years from the date of last sample or until any of the detected contaminants becomes regulated and subject to routine monitoring requirements, whichever comes first.
(d) For detected regulated contaminants in table 1 of R 325.10405, the table or tables shall contain all of the following information:
(i) The MCL for that contaminant expressed as a number equal to or greater than 1.0, as provided in table 1 of R 325.10405.
(ii) The MCLG for that contaminant expressed in the same units as the MCL.
(iii) If there is not an MCL for a detected contaminant, then the table shall indicate that there is a treatment technique, or specify the action level, applicable to that contaminant. The report shall also include the definitions for treatment technique or action level, or both, as appropriate, and specified in subrule (6) of this rule.
(iv) For contaminants subject to an MCL, except turbidity and total coliforms, the table shall indicate the highest contaminant level used to determine compliance with a drinking water standard and the range of detected levels as follows:
(A) If compliance with the MCL is determined annually or less frequently, then the table shall indicate the highest detected level at any sampling point and the range of detected levels expressed in the same units as the MCL.
(B) If compliance with the MCL is determined by calculating a running annual average of all samples taken at a sampling point, then the table shall indicate the highest average of any of the sampling points and the range of all sampling points expressed in the same units as the MCL.
(C) If compliance with the MCL is determined on a supply-wide basis by calculating a running annual average of all samples at all sampling points, then the table shall indicate the average and range of detection expressed in the same units as the MCL.
Note to subdivision (d)(iv) of this subrule: When rounding of results to determine compliance with the MCL is allowed, rounding may be done before multiplying the results by the factor listed in table 1 of R 325.10405.
(v) For turbidity reported pursuant to R 325.10720 and R 325.10611b, the table shall indicate the highest single measurement and the lowest monthly percentage of samples meeting the turbidity limits for the filtration technology being used. The report shall include an explanation of the reasons for measuring turbidity.

(vi) For lead and copper, the table shall indicate the ninetieth percentile value of the most recent round of sampling and the number of sampling sites exceeding the action level.
(vii) For total coliform, the table shall indicate either of the following:
(A) The highest monthly number of positive samples for supplies collecting fewer than 40 samples per month.
(B) The highest monthly percentage of positive samples for supplies collecting not less than 40 samples per month.
(viii) For fecal coliform, the table shall indicate the total number of positive samples.
(ix) The table shall indicate the likely source or sources of detected contaminants to the best of the supplier's knowledge. Specific information regarding contaminants may be available in sanitary surveys and source water assessments and the supplier shall use the information when it is available. If the supplier lacks specific information on the likely source, then the report shall include 1 or more of the typical sources for that contaminant listed in table 1 of R 325.10405 that are most applicable to the community water system.
(e) If a community water system distributes water to its customers from multiple hydraulically independent distribution systems that are fed by different raw water sources, then the table may contain a separate column for each service area and the report may identify each separate distribution system. Alternatively, suppliers may produce separate reports tailored to include data for each service area.
(f) The table or tables shall clearly identify any data indicating violations of MCLs, MRDLs, or treatment techniques and the report shall contain a clear and readily understandable explanation of the violation including the length of the violation, the potential adverse health effects, and actions taken by the supplier to address the violation. The supplier shall use the relevant language in table 1 of R 325.10405 to describe the potential health effects.
(g) For detected unregulated contaminants for which monitoring is required, except Cryptosporidium, the table or tables shall contain the average and range at which the contaminant was detected. The report may include a brief explanation of the reasons for monitoring for unregulated contaminants.
(8) All of the following information shall be included on Cryptosporidium, radon, and other contaminants:
(a) If the supplier has performed any monitoring for Cryptosporidium, including monitoring performed to satisfy the requirements of 40 C.F.R. §141.143, which indicates that Cryptosporidium may be present in the source water or the finished water, the report shall include both of the following:
(i) A summary of the results of the monitoring.
(ii) An explanation of the significance of the results.
(b) If the supply has performed any monitoring for radon which indicates that radon may be present in the finished water, then the report shall include both of the following:
(i) The results of the monitoring.
(ii) An explanation of the significance of the results.
(c) If the supplier has performed additional monitoring which indicates the presence of other contaminants in the finished water, then the supplier is encouraged to report any results that may indicate a health concern. To determine if results may indicate a health concern, the supplier may determine if EPA has proposed a national primary drinking water regulation or issued a health advisory for that contaminant by calling the safe drinking water hotline (800-426-4791). EPA considers detections above a proposed MCL or health advisory level to indicate possible health concerns. For such contaminants, the report may include both of the following:
(i) The results of the monitoring.
(ii) An explanation of the significance of the results noting the existence of a health advisory or a proposed regulation.
(d) Levels of sodium monitored under R 325.10717b(2) during the year covered by the report.
(9) For compliance with state drinking water standards, in addition to the requirements of subrule (7)(f) of this rule, the report shall note any violation that occurred during the year covered by the report for all of the following requirements and include a clear and readily understandable explanation of the violation, any potential adverse health effects, and the steps the supply has taken to correct the violation:
(a) Monitoring and reporting of compliance data.
(b) For filtration and disinfection prescribed by R 325.10611, R 325.10611a, and R 325.10611b, suppliers which have failed to install adequate filtration or disinfection equipment or processes, or have had a failure of such equipment or processes which constitutes a violation shall include the following language as part of the explanation of potential adverse health effects in the report: "Inadequately treated water may contain disease-causing organisms. These organisms include bacteria, viruses, and parasites which can cause symptoms such as nausea, cramps, diarrhea, and associated headaches."
(c) For lead and copper control requirements prescribed by R 325.10604f, suppliers that fail to take one or more actions prescribed by R 325.10604f(1)(d), R 325.10604f(2), R 325.10604f(3), R 325.10604f(4), or R 325.10604f(5) shall include the applicable language of table 1 of R 325.10405 for lead, copper, or both, in the report.
(d) For treatment techniques for acrylamide and epichlorohydrin prescribed by R 325.10604e, suppliers that violate the requirements of R 325.10604e shall include the relevant language from table 1 of R 325.10405 in the report.

(e) Recordkeeping of compliance data.
(f) Special monitoring requirements prescribed by R 325.10717b.
(g) Violation of the terms of a variance, an exemption, or an administrative or judicial order.
(10) For variances and exemptions, if a system is operating under the terms of a variance or an exemption issued under section 20 of the act, then the report shall contain all of the following information:
(a) An explanation of the reasons for the variance or exemption.
(b) The date on which the variance or exemption was issued.
(c) A brief status report on the steps the supply is taking to install treatment, find alternative sources of water, or otherwise comply with the terms and schedules of the variance or exemption.
(d) A notice of any opportunity for public input in the review, or renewal, of the variance or exemption.
(11) The report shall include all of the following additional information:
(a) A brief explanation regarding contaminants which may reasonably be expected to be found in drinking water including bottled water. The explanation may include the language of paragraph (i) through (iii) of this subdivision or suppliers may use their own comparable language. The report also shall include the language of paragraph (iv) of this subdivision.
(i) The sources of drinking water, both tap water and bottled water, including rivers, lakes, streams, ponds, reservoirs, springs, and wells. As water travels over the surface of the land or through the ground, it dissolves naturally occurring minerals and, in some cases, radioactive material, and can pick up substances resulting from the presence of animals or from human activity.
(ii) Contaminants that may be present in source water including all of the following:
(A) Microbial contaminants, such as viruses and bacteria, which may come from sewage treatment plants, septic systems, agricultural livestock operations, and wildlife.
(B) Inorganic contaminants, such as salts and metals, which can be naturally occurring or result from urban stormwater runoff, industrial or domestic wastewater discharges, oil and gas production, mining, or farming.
(C) Pesticides and herbicides, which may come from a variety of sources such as agriculture, urban stormwater runoff, and residential uses.
(D) Organic chemical contaminants, including synthetic and volatile organic chemicals, which are by-products of industrial processes and petroleum production, and can also come from gas stations, urban stormwater runoff, and septic systems.
(E) Radioactive contaminants, which can be naturally occurring or be the result of oil and gas production and mining activities.
(iii) To ensure that tap water is safe to drink, EPA prescribes regulations that limit the amount of certain contaminants in water provided by public water supplies. FDA regulations establish limits for contaminants in bottled water that shall provide the same protection for public health.
(iv) Drinking water, including bottled water, may reasonably be expected to contain at least small amounts of some contaminants. The presence of contaminants does not necessarily indicate that water poses a health risk. More information about contaminants and potential health effects can be obtained by calling the United States environmental protection agency's safe drinking water hotline (800-426-4791).
(b) The report shall include the telephone number of the owner, operator, or designee of the community water system as a source of additional information concerning the report.
(c) In communities that have more than 10% non-English speaking residents, the report shall contain information in the appropriate language or languages regarding the importance of the report or the report shall contain a telephone number or address where residents may contact the supplier to obtain a translated copy of the report or assistance in the appropriate language.
(d) The report shall include information about opportunities for public participation in decisions by the suppliers that may affect the quality of the water; for example, time and place of regularly scheduled board meetings.
(e) The supplier may include such additional information as it determines necessary for public education consistent with, and not detracting from, the purpose of the report.
History: 2001 MR 9, Eff. May 17, 2001; 2003 Mr 2, Eff. Jan. 29, 2003.

R 325.10414 Annual consumer confidence reporting; required additional health information.
Rule 414. (1) All reports shall prominently display the following language: "Some people may be more vulnerable to contaminants in drinking water than the general population. Immuno-compromised persons such as persons with cancer undergoing chemotherapy, persons who have undergone organ transplants, people with HIV/AIDS or other immune system disorders, some elderly, and infants can be particularly at risk from infections. These people may seek advice about drinking water from their health care providers. EPA/CDC guidelines on appropriate means to lessen the risk of infection by Cryptosporidium and other microbial contaminants are available from the Safe Drinking Water Hotline (800-426-4791)."
(2) A supply that detects arsenic at levels above 0.005 mg/l and up to and including 0.01 mg/l shall do either of the following:

(a) Include in its report a short informational statement about arsenic, using language, such as, "While your drinking water meets EPA's standard for arsenic, it does contain low levels of arsenic. EPA's standard balances the current understanding of arsenic's possible health effects against the costs of removing arsenic from drinking water. EPA continues to research the health effects of low levels of arsenic, which is a mineral known to cause cancer in humans at high concentrations and is linked to other health effects such as skin damage and circulatory problems."
(b) Write its own educational statement, but only in consultation with the department.
(3) A supply that detects nitrate at levels above 5 mg/l, but below the MCL shall do either of the following:
(a) Include a short informational statement about the impacts of nitrate on children using language, such as, "Nitrate in drinking water at levels above 10 ppm is a health risk for infants of less than six months of age. High nitrate levels in drinking water can cause blue baby syndrome. Nitrate levels may rise quickly for short periods of time because of rainfall or agricultural activity. If you are caring for an infant, you are encouraged to ask advice from your health care provider."
(b) Write its own educational statement, but only in consultation with the department.
(4) Supplies that detect lead above the action level in more than 5%, and up to and including 10%, of homes sampled shall do either of the following:
(a) Include a short informational statement about the special impact of lead on children using language, such as, "Infants and young children are typically more vulnerable to lead in drinking water than the general population. It is possible that lead levels at your home may be higher than at other homes in the community as a result of materials used in your home's plumbing. If you are concerned about elevated lead levels in your home's water, you may wish to have your water tested and flush your tap for 30 seconds to 2 minutes before using tap water. Additional information is available from the Safe Drinking Water Hotline (800-426-4791)."
(b) Write its own educational statement, but only in consultation with the department.
(5) Community water supplies that detect total trihalomethanes above 0.080 mg/l, but below the MCL in R 325.10604a, as an annual average, monitored and calculated under R 325.10719a, R 325.10719b, and R 325.10719c, shall include health effects language prescribed by table 1 of R 325.10405.
(6) Beginning in the report due by July 1, 2002 and ending January 22, 2006, a supplier of a community water system that detects arsenic above 0.01 mg/l and up to and including 0.05 mg/l shall include the arsenic health effects language prescribed by table 1 of R 325.10405.
History: 2001 MR 9, Eff. May 17, 2001; 2003 MR 2, Eff. Jan. 29, 2003.

R 325.10415 Annual consumer confidence reporting; report delivery; recordkeeping.
Rule 415. (1) Except as provided in subrule (7) of this rule, each supplier of a community water system shall mail or otherwise directly deliver 1 copy of the report to each customer.
(2) The supplier shall make a good faith effort to reach consumers who do not get water bills, using means recommended by the department. For the good faith effort to be adequate, the supplier shall tailor the effort to reach the consumers who are served by the supply but are not bill-paying customers such as renters or workers. A good faith effort to reach consumers may include, but not be limited to, a mix of any of the following methods appropriate to the particular supply:
(a) Posting the report on the Internet.
(b) Mailing to postal patrons in metropolitan areas.
(c) Advertising the availability of the report in the news media.
(d) Publication in a local newspaper.
(e) Posting in public places such as cafeterias or lunch rooms of public buildings.
(f) Delivery of multiple copies for distribution by single-biller customers such as apartment buildings or large private employers.
(g) Delivery to community organizations.
(3) Not later than the date the supply is required to distribute the report to its customers, each supplier of a community water system shall mail a copy of the report to the department, followed within 3 months by a certification that the report has been distributed to customers, and that the information is correct and consistent with the compliance monitoring data previously submitted to the department.
(4) Not later than the date the supplier is required to distribute the report to its customers, each supplier of a community water system shall deliver the report to the local health department that has jurisdiction in the county in which the system is located. If the system's service area is located in more than 1 county, then the report shall be delivered to all appropriate local health departments. In addition, each supplier of a community water system shall deliver the report to any other agency or clearinghouse identified in writing by the department.
(5) Each supplier of a community water system shall make its report available to the public upon request.
(6) Each supplier of a community water system serving 100,000 or more persons shall post its current year's report to a publicly accessible site on the Internet.

(7) The governor or his or her designee, for the purposes of waiving the mailing requirement, may waive the requirement of subrule (1) of this rule for community water supplies serving fewer than 10,000 persons.
(a) Suppliers of systems serving fewer than 10,000 persons that elect to use the waiver shall do all the following:
(i) Publish the report in 1 or more local newspapers serving the area in which the supply is located.
(ii) Inform the customers that the report will not be mailed, either in the newspapers in which the report is published or by other means approved by the department.
(iii) Make the report available to the public upon request.
(b) Suppliers of systems serving 500 or fewer persons that elect to use the waiver may forego the requirements of subdivision (a) of this subrule if they provide notice at least once per year to their customers by mail, door-to-door delivery, or by posting in an appropriate location that the report is available upon request.
(8) A supplier of a system subject to R 325.10411 to R 325.10415 shall retain copies of its consumer confidence report for not less than 3 years.
History: 2001 MR 9, Eff. May 17, 2001; 2003 MR 2, Eff. Jan. 29, 2003.

R 325.10416 Annual water quality reporting; child care centers and K-12 schools classified as nontransient noncommunity water systems.
Rule 416. (1) R 325.10416 to R 325.10419 apply only to the following nontransient noncommunity water systems:
(a) Child care centers classified as nontransient noncommunity water systems.
(b) K-12 schools classified as nontransient noncommunity water systems.
(2) R 325.10418 establishes the minimum requirements for the content of annual water quality reports that shall be available to consumers and to the parents or legal guardians of students or children less than 18 years of age.
History: 2001 MR 9, Eff. May 17, 2001; 2003 MR 2, Eff. Jan. 29, 2003.

R 325.10417 Annual water quality reporting; effective dates.
Rule 417. (1) Each supplier of an existing nontransient noncommunity water system that is also a child care center or K-12 school shall make available its annual water quality reports by October 1 annually.
(2) A supplier of a new nontransient noncommunity water system that is also a child care center or K-12 school shall make available its first annual water quality report by October 1 of the year after its first full calendar year in operation and then by October 1 annually.
History: 2001 MR 9, Eff. May 17, 2001; 2003 MR 2, Eff. Jan. 29, 2003.

R 325.10418 Annual water quality reporting; content of reports.
Rule 418. (1) Each supplier of a nontransient noncommunity water system that is also a child care center or K-12 school shall prepare an annual water quality report that contains either a summary of compliance monitoring data for the previous calendar year or copies of the laboratory reports for all compliance monitoring performed in the previous calendar year.
(2) The first annual water quality report after completion of a source water assessment by the department shall include a notification that the source water assessment has been completed and that a copy of the source water assessment is available upon request.
History: 2001 MR 9, Eff. May 17, 2001; 2003 MR 2, Eff. Jan. 29, 2003.

R 325.10419 Annual water quality reporting; report delivery; recordkeeping.
Rule 419. (1) Each supplier of a nontransient noncommunity water system that is also a child care center or K-12 school shall post, for not less than 30 days, a statement instructing interested parties that the annual water quality report is available upon request.
(2) A supplier of a system subject to this rule shall retain copies of its annual water quality report and the notice of availability for not less than 3 years.
History: 2001 MR 9, Eff. May 17, 2001; 2003 MR 2, Eff. Jan. 29, 2003.

R 325.10420 Annual water quality reporting; contaminants for vulnerable subpopulation.
Rule 420. Pursuant to section 14 of the act, if any contaminants listed in table 1 of this rule are detected above a level of concern as indicated in table 1 of this rule, then the consumer confidence report or the annual water quality report may include a description of the potential health effects and the vulnerable subpopulation that may be susceptible to the level of contaminant detected using the relevant language provided in table 1 of R 325.10405.

Table 1 Contaminants for vulnerable subpopulation reporting

Contaminant	Susceptible vulnerable subpopulation	Level of concern
Fecal coliform/ E. coli	Infants, young children, the elderly, and people with severely compromised immune systems.	Confirmed presence (any confirmed detect)
Copper	People with Wilson's disease.	1.3 mg/l (ppm)
Fluoride	Children.	4.0 mg/l (ppm)
Lead	Infants and children.	15.0 µg/l (ppb)
Nitrate	Infants below the age of 6 months.	10.0 mg/l (ppm)
Nitrite	Infants below the age of 6 months.	1.0 mg/l (ppm)

History: 2001 MR 9, Eff. May 17, 2001; 2003 MR 2, Eff. Jan. 29, 2003.

PART 5. TYPES OF PUBLIC WATER SUPPLIES

R 325.10505
Source: 1991 AACS.

R 325.10506
Source: 1991 AACS.

PART 6. STATE DRINKING WATER STANDARDS AND ANALYTICAL TECHNIQUES

R 325.10601
Source: 1998-2000 AACS.

R 325.10601a
Source: 1998-2000 AACS.

R 325.10602
Source: 1993 AACS.

R 325.10603
Source: 1993 AACS.

R 325.10604
Source: 1998-2000 AACS.

R 325.10604a Disinfection for phosphate or iron removal treatment systems.
Rule 604a. Disinfection shall be provided for public water supplies that employ phosphate treatment systems or certain iron removal treatment systems.
History: 1984 MR 6, Eff. July 6, 1984; 1993 MR 6, Eff. July 2, 1993; 2003 MR 2, Eff. Jan. 29, 2003.

R 325.10604b
Source: 1994 AACS.

R 325.10604c
Source: 2002 AACS.

R 325.10604d
Source: 1998-2000 AACS.

R 325.10604e
Source: 1993 AACS.

R 325.10604f
Source: 2002 AACS.

R 325.10605 Analytical techniques and sample collection procedures; adoption by reference.
Rule 605. The analytical techniques and sample collection procedures used in the determination of compliance with the state

drinking water standards for microbiological contaminants, inorganic chemical contaminants, organic chemical contaminants, including maximum TTHM potential, turbidity, residual disinfectants, disinfection byproducts, disinfection byproduct precursors, temperature, pH, conductivity, alkalinity, and radioactivity which are contained in 40 C.F.R. parts 141 and 143, (2001, 2000, 1999), and which have been promulgated by the United States EPA under authority of the safe drinking water act of 1974 (public law 93-523), the safe drinking water act amendments of 1986 (public law 99-339), and the safe drinking water act amendments of 1996 (public law 104-182), 42 U.S.C. 300F et seq. are adopted by reference in these rules. The adopted material is available from the superintendent of documents at the address in R 325.10116(2) for a cost of $56.00 at the time of adoption of these rules. The adopted material is available for inspection, or copies are available at no cost from the offices of the department at the address in R 325.10116(a).
History: 1954 ACS 94, Eff. Jan. 12, 1978; 1979 AC; 1991 MR 11, Eff. Nov. 22, 1991; 1993 MR 6, Eff. July 2, 1993; 1998 MR 3, Eff. Apr. 8, 1998; 2000 MR 19, Eff. Dec. 8, 2000; 2003 MR 2, Eff. Jan. 29, 2003.

R 325.10605a
Source: 1998-2000 AACS.

R 325.10605b
Source: 1998-2000 AACS.

R 325.10605c
Source: 1998-2000 AACS.

R 325.10605d
Source: 1998-2000 AACS.

R 325.10605e
Source: 1998-2000 AACS.

R 325.10606
Source: 1998-2000 AACS.

R 325.10607
Source: 1998-2000 AACS.

R 325.10608
Source: 1998-2000 AACS.

R 325.10609
Source: 1998-2000 AACS.

R 325.10610 MCLs for disinfection byproducts.
Rule 610. (1) The maximum contaminant levels (MCLs) for disinfection byproducts are as follows:

Disinfection byproduct	MCL (mg/l)
Total trihalomethanes (TTHM)	0.080/0.10 *
Haloacetic acids (five) (HAA5)	0.060
Bromate	0.010
Chlorite	1.0

* The MCL of 0.080 mg/l for TTHM is effective January 1, 2002, for subpart H systems serving 10,000 or more people. The MCL of 0.10 mg/l for TTHM and the requirements of R 325.10719a, R 325.10719b, R 325.10719c, and R 325.10719d are in effect until December 31, 2003, for all other community water systems that add a disinfectant to the water as a normal part of the treatment process. Compliance with the 0.10 mg/l TTHM MCL shall be determined based on a running annual average of quarterly samples collected under R 325.10719b or R 325.10719c(1). Beginning January 1, 2004, the MCL will be 0.080 mg/l for systems subject to this rule, other than subpart H systems serving 10,000 or more people which became subject to this rule on January 1, 2002, and the compliance requirements will be according to R 325.10610b. Beginning January 1, 2004, the total trihalomethanes MCL of 0.10 mg/l and this footnote will no longer apply.
(2) Except for the MCL of 0.10 mg/l for TTHM, this rule, R 325.10610a, R 325.10610b, R 325.10610c, R 325.10719e, and

R 325.10719f apply to community and nontransient noncommunity water systems that add a chemical disinfectant to the water in any part of the drinking water treatment process and to transient noncommunity water systems adding chlorine dioxide. Transient noncommunity water systems are only required to comply with the chlorine dioxide requirements. This rule, R 325.10610a, R 325.10610b, R 325.10610c, R 325.10719e, and R 325.10719f are effective January 1, 2002, for subpart H systems serving 10,000 or more people, and become effective January 1, 2004, for other systems subject to this rule.
History: 2003 MR 2, Eff. Jan. 29, 2003.

R 325.10610a Maximum residual disinfectant levels.
Rule 610a. (1) Maximum residual disinfectant levels (MRDLS) are as follows:

Disinfectant residual	MRDL (mg/l)
Chlorine	4.0 as chlorine
Chloramines	4.0 as chlorine
Chlorine dioxide	0.8 as chlorine dioxide

(2) This rule applies as specified in R 325.10610(2).
(3) Suppliers may increase residual disinfectant levels in the distribution system of chlorine or chloramines, but shall not increase the levels of chlorine dioxide, to a level and for a time necessary to protect public health to address specific microbiological contamination problems caused by circumstances such as, but not limited to, distribution line breaks, storm run-off events, source water contamination events, or cross-connection events.
History: 2003 MR 2, Eff. Jan. 29, 2003.

R 325.10610b Disinfectant residuals, disinfection byproducts, and disinfection byproduct precursors; compliance requirements.
(1) This rule applies as specified in R 325.10610(2). Compliance with this rule is based on all of the following:
(a) All samples taken and analyzed under R 325.10605, R 325.10610, R 325.610a, this rule, R 325.10610c, R 325.10719e, and R 325.10719f shall be included in determining compliance.
(b) If, during the first year of monitoring under R 325.10719e, any individual quarter's average will cause the running annual average of that system to exceed the MCL, the system is out of compliance at the end of that quarter.
(c) A system is in violation of the state drinking water standard if compliance is based on 4 consecutive quarters of monitoring and the average of samples, or quarterly averages, or running annual averages, whichever is applicable, exceeds the state drinking water standard, unless otherwise noted in this rule.
(d) Where compliance is based on a running annual average of monthly or quarterly samples or averages and the supplier fails to complete 4 consecutive quarters or 12 consecutive months of monitoring, whichever is applicable, compliance with the MCL for the last 4 quarter compliance period is based on an average of the available data unless otherwise stated in this rule.
(2) Compliance with disinfection byproducts requirements is based on all of the following:
(a) Compliance with TTHM and HAA5 requirements are based on both of the following:
(i) For suppliers monitoring quarterly, compliance with MCLs in R 325.10610 is based on a running annual average, computed quarterly, of quarterly averages of all samples collected under R 325.10719e(2)(a).
(ii) For suppliers monitoring less frequently than quarterly, compliance is based on an average of samples taken that year under R 325.10719e(2)(a) if the average does not exceed the MCLs in R 325.10610. If the average of these samples exceeds the MCL, suppliers shall increase monitoring to once per quarter per treatment plant and the system is not in violation of the MCL until it has completed 1 year of quarterly monitoring, unless the result of fewer than 4 quarters of monitoring will cause the running annual average to exceed the MCL, in which case the system is in violation at the end of that quarter. Suppliers required to increase monitoring frequency to quarterly monitoring shall calculate compliance by including the sample which triggered the increased monitoring plus the following 3 quarters of monitoring.
(b) Compliance with the bromate requirements is based on a running annual average, computed quarterly, of monthly samples, or, for months in which the system takes more than 1 sample, the average of all samples taken during the month, collected under R 325.10719e(2)(c).
(c) Compliance with the chlorite requirements is based on an average of each 3-sample set taken in the distribution system under R 325.10719e(2)(b)(i)(B) and R 325.10719e(2)(b)(ii). If the average of any 3-sample set exceeds the MCL, the system is in violation of the MCL.
(3) Compliance with disinfectant residuals requirements is based on both of the following:
(a) Compliance with the chlorine and chloramines requirements is based on a running annual average, computed quarterly, of

monthly averages of all samples collected by the system under R 325.10719e(3)(a). In cases where systems switch between the use of chlorine and chloramines for residual disinfection during the year, compliance is determined by including together all monitoring results of both chlorine and chloramines in calculating compliance. Suppliers shall clearly indicate which residual disinfectant was analyzed for each sample when submitting reports to the department under R 325.11502a.
(b) Compliance with the chlorine dioxide requirements is based on consecutive daily samples collected by the system under R 325.10719e(3)(b).
(i) A tier 1 violation occurs when a daily sample taken at the entrance to the distribution system exceeds the MRDL, and on the following day 1, or more, of the 3 samples taken in the distribution system exceed the MRDL. The supplier shall take immediate corrective action to lower the level of chlorine dioxide below the MRDL. Failure to monitor in the distribution system the day following an exceedance of the chlorine dioxide MRDL at the entrance to the distribution system is also a tier 1 MRDL violation.
(ii) A tier 2 violation occurs when 2 consecutive daily samples taken at the entrance to the distribution system exceed the MRDL and all distribution system samples taken are below the MRDL. The supplier shall take corrective action to lower the level of chlorine dioxide below the MRDL at the point of sampling. Failure to monitor at the entrance to the distribution system the day following an exceedance of the chlorine dioxide MRDL at the entrance to the distribution system is also a tier 2 MRDL violation.
(4) Compliance with the treatment technique for disinfection byproduct precursors (DBPP) is determined as specified by R 325.10610c(3). Suppliers may begin monitoring to determine whether step 1 TOC removals can be met 12 months before the compliance date for the system. This monitoring is not required and failure to monitor during this period is not a violation. However, a supplier that does not monitor during this period, and then determines, in the first 12 months after the compliance date, that the system is not able to meet the step 1 requirements in R 325.10610c(2)(b) and shall therefore apply for alternate minimum TOC removal (step 2) requirements, is not eligible for retroactive approval of alternate minimum TOC removal (step 2) requirements as allowed under R 325.10610c(2)(c) and is in violation. Suppliers may apply for alternate minimum TOC removal (step 2) requirements any time after the compliance date. For systems required to meet step 1 TOC removals, if the value calculated under R 325.10610c(3)(a)(iv) is less than 1.00 calculated as a running annual average of monthly samples, computed quarterly, the system is in violation of the treatment technique requirements.
History: 2003 MR 2, Eff. Jan. 29, 2003.

R 325.10610c Treatment technique for control of disinfection byproduct (DBP) precursors.
Rule 610c. (1) This rule applies as specified in R 325.10610(2). Compliance with this rule is based on all of the following:
(a) Suppliers of subpart H systems using conventional filtration shall operate with enhanced coagulation or enhanced softening to achieve the TOC percent removal levels specified in subrule (2) of this rule unless the system meets at least 1 of the alternative compliance criteria listed in subdivision (b) or (c) of this subrule.
(b) Suppliers of subpart H systems using conventional filtration may use the following alternative compliance criteria to comply with this rule instead of complying with subrule (2) of this rule. Suppliers of systems using alternative compliance criteria shall still comply with TOC monitoring requirements in R 325.10719e(4):
(i) The system's source water TOC level is less than 2.0 mg/l, calculated quarterly as a running annual average.
(ii) The system's treated water TOC level is less than 2.0 mg/l, calculated quarterly as a running annual average.
(iii) The system's source water TOC level is less than 4.0 mg/l, calculated quarterly as a running annual average; the source water alkalinity, measured under R 325.10605, is more than 60 mg/l as calcium carbonate, calculated quarterly as a running annual average; and either the TTHM and HAA5 running annual averages are not more than 0.040 mg/l and 0.030 mg/l, respectively, or before the effective date for compliance in R 325.10610(2), the supplier has made a clear and irrevocable financial commitment to use technologies that will limit the levels of TTHM and HAA5 to not more than 0.040 mg/l and 0.030 mg/l, respectively. Suppliers shall submit evidence of a clear and irrevocable financial commitment, in addition to a schedule containing milestones and periodic progress reports for installation and operation of appropriate technologies, to the department for approval not later than the effective date for compliance in R 325.10610(2). These technologies shall be installed and operating not later than June 30, 2005. Failure to install and operate these technologies by the date in the approved schedule is a violation of these rules.
(iv) The TTHM and HAA5 running annual averages are not more than 0.040 mg/l and 0.030 mg/l, respectively, and the supplier uses only chlorine for primary disinfection and maintenance of a residual in the distribution system.
(v) The system's source water SUVA, before any treatment and measured monthly, is less than or equal to 2.0 liters per milligram meter (l/mg-m), calculated quarterly as a running annual average.
(vi) The system's finished water SUVA, measured monthly, is less than or equal to 2.0 l/mg-m, calculated quarterly as a running annual average.
(c) Suppliers of systems practicing enhanced softening that cannot achieve the TOC removals required by subrule (2)(b) of this rule may use the following alternative compliance criteria instead of complying with subrule (2) of this rule; however,

suppliers of systems using alternative compliance criteria shall still comply with TOC monitoring requirements in R 325.10719e(4)(b):
(i) Softening that results in lowering the treated water alkalinity to less than 60 mg/l as calcium carbonate, measured monthly and calculated quarterly as a running annual average.
(ii) Softening that results in removing not less than 10 mg/l of magnesium hardness as calcium carbonate, measured monthly and calculated quarterly as an annual running average.
(2) All of the following provisions are enhanced coagulation and enhanced softening performance requirements:
(a) Suppliers shall achieve the percent reduction of TOC specified in subdivision (b) of this subrule between the source water and the combined filter effluent, unless the department approves a supplier's request for alternate minimum TOC removal (step 2) requirements under subdivision (c) of this subrule.
(b) Required step 1 TOC reductions, indicated in table 1 of this rule, are based on specified source water parameters. Suppliers practicing softening are required to meet the step 1 TOC reductions in the far-right column "source water alkalinity >120 mg/l" for the specified source water TOC.

Table 1 Step 1 required removal of TOC by enhanced coagulation and enhanced softening for subpart H systems using conventional filtration [A, B]

Source-water TOC, mg/l	*Source-water alkalinity, mg/l as calcium carbonate*		
	0-60	*>60-120*	*>120*[C]
>2.0-4.0	35.0%	25.0%	15.0%
>4.0-8.0	45.0%	35.0%	25.0%
>8.0	50.0%	40.0%	30.0%

[A] Suppliers meeting at least 1 of the conditions in subrule (1)(b)(i) through (vi) of this rule are not required to operate with enhanced coagulation.
[B] Suppliers of softening systems meeting 1 of the alternative compliance criteria in subrule (1)(c) of this rule are not required to operate with enhanced softening.
[C] Suppliers practicing softening shall meet the TOC removal requirements in this column.

(c) Suppliers of subpart H conventional filtration systems that cannot achieve the step 1 TOC removals required by subdivision (b) of this subrule due to water quality parameters or operational constraints shall apply to the department, within 3 months of failure to achieve the TOC removals required by subdivision (b) of this subrule, for approval of alternative minimum TOC removal (step 2) requirements submitted by the system. If the department approves the step 2 requirements, then a system's failure to meet the step 1 TOC removals will not be considered a treatment technique violation during the interim time period between the end of the 12-month data gathering monitoring period in R 325.10610b(4) and receipt of the department's approval. Until the department approves the step 2 requirements, the system shall meet the step 1 TOC removals contained in subdivision (b) of this subrule.
(d) Applications made to the department by suppliers of enhanced coagulation systems for approval of alternative minimum TOC removal (step 2) requirements under subdivision (c) of this subrule shall include, at a minimum, results of bench- or pilot-scale testing conducted under paragraph (i) of this subdivision to determine the alternate enhanced coagulation level:
(i) Alternate enhanced coagulation level is defined as coagulation at a coagulant dose and pH as determined by the method described in paragraphs (i) to (v) of this subdivision such that an incremental addition of 10 mg/l of alum, or equivalent amount of ferric salt, results in a TOC removal of less than or equal to 0.3 mg/l. The percent removal of TOC at this point is the minimum TOC removal required for the system. Once approved by the department, this minimum requirement supersedes the minimum TOC removal required by table 1 of this rule. This requirement will be effective until the department approves a new value based on the results of a new bench- and pilot-scale test. Failure to achieve department-set alternative minimum TOC removal levels is a violation of these rules.
(ii) Bench- or pilot-scale testing of enhanced coagulation shall be conducted by using representative water samples and adding 10 mg/l increments of alum, or equivalent amounts of ferric salt, until the pH is reduced to a level less than or equal to the enhanced coagulation step 2 target pH shown in the following table:

Table 2 Enhanced coagulation step 2 target pH

Alkalinity (mg/l as calcium carbonate)	*Target pH*
0-60	5.5
>60-120	6.3
>120-240	7.0
>240	7.5

(iii) For waters with alkalinities of less than 60 mg/l for which addition of small amounts of alum or equivalent addition of iron coagulant drives the pH below 5.5 before significant TOC removal occurs, the supplier shall add necessary chemicals to maintain the pH between 5.3 and 5.7 in samples until the TOC removal of 0.3 mg/l per 10 mg/l alum added, or equivalent addition of iron coagulant, is reached.
(iv) The system may operate at any coagulant dose or pH necessary, and consistent with these rules, to achieve the minimum TOC percent removal approved under subdivision (c) of this subrule.
(v) If the TOC removal is consistently less than 0.3 mg/l of TOC per 10 mg/l of incremental alum dose at all dosages of alum, or equivalent addition of iron coagulant, the water is considered to contain TOC not amenable to enhanced coagulation. The supplier may then apply to the department for a waiver of enhanced coagulation requirements. The department's determination will be made on a case-by-case basis and the department will consider supporting documentation from the water supplier of bench or pilot scale testing designed to demonstrate the best level of TOC removal that is feasibly attainable, given the unique characteristics of the raw water to be treated.
(3) Suppliers shall calculate compliance using the methods in either of the following provisions, as applicable:
(a) Suppliers of subpart H systems, other than those identified in subrule (1)(b) or (c) of this rule, shall comply with requirements contained in subule (2)(b) or (c) of this rule. Suppliers shall calculate compliance quarterly, beginning after the supplier has collected 12 months of data, by determining an annual average using the following method:
(i) Determine actual monthly TOC percent removal, equal to: (1 - (treated water TOC/source water TOC)) x 100.
(ii) Determine the required monthly TOC percent removal, from either table 1 of this rule or from subrule (2)(c) of this rule.
(iii) Divide the value in paragraph (i) of this subdivision by the value in paragraph (ii) of this subdivision.
(iv) Add together the results of paragraph (iii) of this subdivision for the last 12 months and divide by 12.
(v) If the value calculated in paragraph (iv) of this subdivision is less than 1.00, then the system is not in compliance with the TOC percent removal requirements.
(b) Suppliers may use the provisions in paragraphs (i) through (v) of this subdivision instead of the calculations in subdivision (a)(i) through (v) of this subrule to determine compliance with TOC percent removal requirements, as follows:
(i) In any month that the system's treated or source water TOC level is less than 2.0 mg/l, the supplier may assign a monthly value of 1.0, instead of the value calculated in subdivision (a)(iii) of this subrule, when calculating compliance under subdivision (a) of this subrule.
(ii) In any month that a system practicing softening removes not less than 10 mg/l of magnesium hardness as calcium carbonate, the supplier may assign a monthly value of 1.0, instead of the value calculated in subdivision (a)(iii) of this subrule, when calculating compliance under subdivision (a) of this subrule.
(iii) In any month that the system's source water SUVA, before any treatment, is less than or equal to 2.0 l/mg-m, the supplier may assign a monthly value of 1.0, instead of the value calculated in subdivision (a)(iii) of this subrule, when calculating compliance under subdivision (a) of this subrule.
(iv) In any month that the system's finished water SUVA is less than or equal to 2.0 l/mg-m, the supplier may assign a monthly value of 1.0, instead of the value calculated in subdivision (a)(iii) of this subrule, when calculating compliance under subdivision (a) of this subrule.
(v) In any month that a system practicing enhanced softening lowers alkalinity below 60 mg/l as calcium carbonate, the supplier may assign a monthly value of 1.0, instead of the value calculated in subdivision (a)(iii) of this subrule, when calculating compliance under subdivision (a) of this subrule.
(4) The treatment techniques to control the level of disinfection byproduct precursors in drinking water treatment and distribution systems for subpart H systems using conventional filtration is enhanced coagulation or enhanced softening.
History: 2003 MR 2, Eff. Jan. 29, 2003.

R 325.10611 Filtration and disinfection; generally.

Rule 611. (1) A supplier of a public water system shall comply with the requirements of R 325.10807, R 325.10808, R 325.10812, R 325.10813, R 325.10816, R 325.10817, R 325.10818, R 325.10819, R 325.10820, and R 325.10822, shall demonstrate a safe microbiological water quality history, and may be required to demonstrate stability in other measurements of water quality; or the supplier shall provide complete treatment.
(2) The department may grant a deviation from the provisions of subrule (1) of this rule if the supplier can demonstrate that the system is capable of producing finished water meeting state drinking water standards applicable to systems using only ground water not under the direct influence of surface water.
(3) Suppliers of subpart H systems shall comply with the treatment techniques of this rule, R 325.10611a, R 325.10611b, the sampling requirements of R 325.10720, and the reporting and recordkeeping requirements of R 325.10720a, except where noted. The treatment technique requirements consist of installing and properly operating water treatment processes that reliably achieve all of the following applicable removal or inactivation percentages between a point where the raw water is not subject to recontamination by surface water runoff and a point downstream before or at the first customer:
(a) Not less than 99.9% (3-log) inactivation or the removal of giardia lamblia cysts and not less than 99.99% (4-log) inactivation or the removal of viruses.
(b) A 99% (2-log) removal of cryptosporidium oocysts for systems subject to this rule serving 10,000 or more people.
(4) If a supplier of a public water system does not currently provide complete treatment and if the department determines that a system requires complete treatment either under subrules (1) and (2) or because the system uses surface water or groundwater under the direct influence of surface water, then the supplier shall provide complete treatment within 18 months of the department's determination and shall provide interim disinfection and monitoring as considered necessary by the department. During the interim disinfection period, systems requiring complete treatment under subrule (1) and (2) of this rule shall demonstrate safe microbiological water quality. Subpart H systems are subject to subrule (3) of this rule within 18 months or until treatment is installed, whichever occurs first. During the interim disinfection period, subpart H systems shall also comply with both of the following provisions:
(a) The supplier shall collect at least 1 sample from the source water every 4 hours while the source is being utilized and have the sample analyzed for turbidity.
(b) If the result of 1 or more samples taken under subdivision (a) of this subrule is more than 1 ntu, then within 24 hours of the determination that a turbidity measurement is more than 1 ntu, the supplier shall collect at least 1 sample near the first service connection and have the sample analyzed for total coliform. Sample results from the coliform monitoring shall be included in determining compliance with the total coliform standard.
History: 2003 MR 2, Eff. Jan. 29, 2003.

R 325.10611a Filtration and disinfection; disinfection.
Rule 611a. (1) Subpart H systems shall provide sufficient disinfectant contact time before the water enters the distribution system to assure adequate disinfection.
(2) Subpart H systems shall provide disinfection treatment achieving all of the following conditions:
(a) The disinfection treatment shall be sufficient to ensure that the total treatment processes of that system achieve the standards set forth in R 325.611(3)(a).
(b) The residual disinfectant concentration in the water entering the distribution system shall not be less than 0.2 milligrams per liter for more than 4 hours.
(c) The residual disinfectant concentration in the distribution system, measured as total chlorine, free available chlorine, combined chlorine, or chlorine dioxide shall not be undetectable in more than 5% of the samples each month for any 2 consecutive months that the system serves water to the public. Water in the distribution system that has a heterotrophic bacteria concentration less than or equal to 500 per milliliter, measured as heterotrophic plate count (HPC), is considered to have a detectable disinfectant residual for purposes of determining compliance with this subdivision.
(d) If the department determines, based on site-specific considerations, that a system does not have means for having a sample transported and analyzed for HPC and that the system is providing adequate disinfection in the distribution system, then the requirements of subdivision (c) of this subrule do not apply.
History: 2003 MR 2, Eff. Jan. 29, 2003.

R 325.10611b Filtration and disinfection; filtration.
Rule 611b. (1) Suppliers of subpart H systems shall comply with both of the following filtration requirements, as applicable:
(a) For suppliers of systems using conventional filtration, direct filtration, or membrane filtration, the turbidity level of representative samples of a system's filtered water shall at no time exceed 1 ntu for systems serving 10,000 or more people, or 5 ntu for systems serving fewer than 10,000 people. In not less than 95% of the measurements taken each month, the turbidity level of representative samples of a system's filtered water shall be less than or equal to 0.3 ntu for systems serving 10,000 or more people, or 0.5 ntu for other systems.

(b) For suppliers of systems using slow sand filtration or diatomaceous earth filtration, the turbidity level of representative samples of a system's filtered water shall at no time exceed 5 ntu, and shall be less than or equal to 1 ntu in not less than 95% of the measurements taken each month.
(2) A system using lime softening, where the final pH exceeds 8.3, may acidify representative samples before turbidity analysis using a protocol approved by the department. The approved protocol shall require the use of a concentrated acid in sufficient quantities to lower the pH to less than 8.3, dissolve only calcium carbonate and magnesium hydroxide, and not to dilute the representative sample.
(3) A public water system may use a filtration technology not listed in subrule (1) of this rule if the supplier demonstrates to the department, using pilot plant studies or other means, that the alternative filtration technology, in combination with disinfection treatment, consistently achieves the removal or inactivation percentages set forth in R 325.10611(3), and the department approves the use of the filtration technology. Requirements of systems after receiving approval are as follows:
(a) For each approval for a system serving fewer than 10,000 people that makes this demonstration, the turbidity requirements of subrule (1)(b) of this rule applies.
(b) For each approval for a system serving 10,000 or more people, the department will set turbidity performance requirements that the system shall meet not less than 95% of the time and the system shall not exceed, at any time, at a level that consistently achieves the removal or inactivation percentages set forth in R 325.10611(3).
History: 2003 MR 2, Eff. Jan. 29, 2003.

PART 7. SURVEILLANCE, INSPECTION, AND MONITORING

R 325.10702 Evaluation of adequacy and condition of public water systems; sanitary surveys.
Rule 702. (1) Under section 3 of the act, the department shall make sanitary surveys, on-site inspections, surveillance observations, or special purpose investigations for the purpose of evaluating the adequacy and condition of public water systems at a frequency which may be determined by the department.
(2) Community and noncommunity water systems which do not collect 5 or more routine samples per month under R 325.10705(2) and R 325.10706(2) shall undergo an initial sanitary survey by June 29, 1994, for community water systems and by June 29, 1999, for noncommunity water systems. These systems shall undergo another sanitary survey every 5 years, except noncommunity water systems that use only disinfected groundwater not under the direct influence of surface water meeting state drinking water standards shall undergo subsequent sanitary surveys at least once every 10 years after the initial sanitary survey. Based on the results of each sanitary survey, the department shall determine whether the existing monitoring frequency is adequate and what additional measures, if any, the supplier shall take to improve drinking water quality.
(3) Subpart H systems shall undergo sanitary surveys at least once every 3 years for community water systems and at least once every 5 years for noncommunity water systems. Community water systems that have undergone sanitary surveys after December 1995 and have demonstrated outstanding performance may reduce the frequency of sanitary surveys to at least once every 5 years.
History: 1954 ACS 94, Eff. Jan. 12, 1978; 1979 AC; 1991 MR 11, Eff. Nov. 22, 1991; 2003 MR 2, Eff. Jan. 29, 2003.

R 325.10704 Collection and analysis of samples for coliform bacteria generally.
Rule 704. (1) Suppliers of community and noncommunity water systems shall collect samples and cause analyses to be made for coliform bacteria to determine compliance with the state drinking water standards.
(2) The department may require samples to be collected and analyzed for coliform bacteria for type III public water systems at a frequency as may be considered necessary by the department.
(3) If any routine or repeat sample is total coliform-positive, the supplier shall analyze that total coliform-positive culture medium to determine if fecal coliforms are present. Analysis for E. coli may be performed instead of fecal coliforms.
History: 1954 ACS 94, Eff. Jan. 12, 1978; 1979 AC; 2003 MR 2, Eff. Jan. 29, 2003.

R 325.10705
Source: 2002 AACS.

R 325.10706 Collection and analysis of samples for coliform bacteria; noncommunity water system.
Rule 706. (1) A supplier of a noncommunity water system shall collect samples for total coliform analysis at sites representative of the water throughout the distribution system according to a written sample siting plan that is subject to department review and revision.
(2) A supplier of a noncommunity water system shall monitor as follows:
(a) A supplier of a noncommunity water system serving more than 1,000 people shall monitor at the same frequency as a like-sized community water system as specified in table 1 of R 325.10705.

(b) A supplier of a noncommunity water system for which complete treatment is required under R 325.10611(1) shall monitor at the same frequency as a like-sized community water system as specified in table 1 of R 325.10705.
(c) A supplier of a system using only groundwater not under the direct influence of surface water and serving fewer than 1,001 people shall monitor each calendar quarter that the system provides water to the public.
(3) The department, based on a satisfactory sanitary survey of a noncommunity water system serving fewer than 1,001 people with a protected groundwater source, may vary the frequency of sampling. However, the frequency shall be at least once per year. The decision to reduce the monitoring frequency shall be in writing.
History: 1954 ACS 94, Eff. Jan. 12, 1978; 1979 AC; 1989 MR 8, Eff. Sept. 13, 1989; 1991 MR 11, Eff. Nov. 22, 1991; 1993 MR 6, Eff. July 2, 1993; 2003 MR 2, Eff. Jan. 29, 2003.

R 325.10707
Source: 1991 AACS.

R 325.10707a
Source: 1998-2000 AACS.

R 325.10707b General notification requirements for total coliform and fecal coliform/Escherichia coli (E. coli).
Rule 707b. (1) Except as noted in this rule, a supplier of a public water system shall report to the department the results of the analyses as required in R 325.10734(1).
(2) A supplier that has failed to comply with a coliform monitoring requirement, including the sanitary survey requirement, shall report the monitoring violation to the department within 10 days after the system discovers the violation.
(3) A supplier of a public water system that exceeded the MCL for total coliform under R 325.10602 shall report the violation to the department not later than the end of the next business day after the supplier learns of the violation.
(4) If fecal coliform or E. coli are determined to be present in any routine or repeat sample, the supplier shall notify the department by the end of the day that the supplier is notified of the test result, unless the supplier is notified of the result after the department office is closed, in which case the supplier shall notify the department before the end of the next business day.
History: 1991 MR 11, Eff. Nov. 22, 1991; 2003 MR 2, Eff. Jan. 29, 2003.

R 325.10708
Source: 1991 AACS.

R 325.10709
Source: 1998-2000 AACS.

R 325.10710
Source: 2002 AACS.

R 325.10710a
Source: 2002 AACS.

R 325.10710b
Source: 2002 AACS.

R 325.10710c
Source: 2002 AACS.

R 325.10710d
Source: 2002 AACS.

R 325.10711
Source: 1997 AACS.

R 325.10712
Source: 1997 AACS.

R 325.10713
Source: 1997 AACS.

R 325.10714
Source: 1997 AACS.

R 325.10715
Source: 1997 AACS.

R 325.10716
Source: 2002 AACS.

R 325.10717
Source: 1998-2000 AACS.

R 325.10717a
Source: 1997 AACS.

R 325.10717b
Source: 2002 AACS.

R 325.10717c
Source: 1993 AACS.

R 325.10718
Source: 1997 AACS.

R 325.10719 Rescinded.
History: 1954 ACS 94, Eff. Jan. 12, 1978; 1979 AC; 1984 MR 6, Eff. July 6, 1984; 1989 MR 8, Eff. Sept. 13, 1989; 1993 MR 6, Eff. July 2, 1993; rescinded 2003 MR 2, Eff. Jan. 29, 2003.

R 325.10719a Total trihalomethane; collection and analysis of samples generally.
Rule 719a. (1) Systems subject to this rule, as specified in subrule (4) of this rule, shall collect samples and cause analyses to be performed for total trihalomethanes (TTHM) levels to determine compliance with the MCL of 0.10 mg/l under R 325.10610(1). For public water systems purchasing finished water from another public water system, the department may modify the monitoring requirements for TTHM in accordance with R 325.10733.
(2) Based on knowledge of the source and treatment, the department may require certain public water systems serving fewer than 10,000 people to monitor for TTHM as deemed necessary.
(3) The minimum number of samples required to be taken by public water systems for total trihalomethane analysis shall be based on the number of treatment plants used by the public water system, except that multiple wells drawing water from a single aquifer shall, with department approval, be considered 1 treatment plant for determining the minimum number of samples. All samples required to be taken within an established sampling frequency shall be taken within a 24-hour period.
(4) This rule, R 325.10719b, R 325.10719c, and R 325.10719d apply to community water systems using only ground water not under the direct influence of surface water that add a disinfectant in any part of the treatment process and serve a population of 10,000 or more until December 31, 2003. After December 31, 2003, this rule, R 325.10719b, R 325.10719c, and R 325.10719d no longer apply.
History: 1984 MR 6, Eff. July 6, 1984; 2003 MR 2, Eff. Jan. 29, 2003.

R 325.10719b
Source: 1984 AACS.

R 325.10719c
Source: 1984 AACS.

R 325.10719d Total trihalomethane; reporting and notification.
Rule 719d. (1) The results of all analyses performed to determine TTHM concentration pursuant to this part shall be reported to the department under R 325.10734(1). Samples collected for TTHM analyses under R 325.10719a shall be used for determining compliance with the total trihalomethane MCL of 0.10 mg/l in R 325.10610, unless the analytical results are invalidated for technical reasons.
(2) If the average of samples covering any 12-month period exceeds the MCL, the supplier of water shall report to the

department under R 325.10734(2). Monitoring after public notification shall be at a frequency designated by the department.
(3) This rule applies as set forth in R 325.10719a(4).
History: 1984 MR 6, Eff. July 6, 1984; 2003 MR 2, Eff. Jan. 29, 2003.

R 325.10719e Disinfectant residuals, disinfection byproducts, and disinfection byproduct precursors; monitoring requirements.
Rule 719e. (1) This rule applies as set forth in R 325.10610. All of the following provisions are general monitoring requirements:
(a) Suppliers shall take all samples during normal operating conditions.
(b) Suppliers may consider multiple wells drawing water from a single aquifer as 1 treatment plant for determining the minimum number of TTHM and HAA5 samples required, with department approval. This approval will be granted in writing if the supplier can demonstrate that the finished water quality characteristic of all entry points to the distribution system drawing from the identified aquifer, whether served by multiple wells or a single well, are similar and are expected to react alike in terms of the formation of disinfection byproducts. To demonstrate this, the supplier shall arrange for a study to be prepared by an individual or firm considered qualified to perform this work, such as a hydrogeologist, geologist, or engineer. All of the following provisions apply to the study:
(i) The study shall consider well construction and geology, including all of the following:
(A) Well locations marked on a topographical map.
(B) Well depths.
(C) Well logs showing geological strata, identifying water production zones, screened or slotted areas, and grouting of the annular space.
(D) Static water levels.
(E) Aquifer studies and maps.
(F) Treatment applied.
(ii) The study shall consider water characteristics and chemistry of each well including all of the following:
(A) Field pH.
(B) Field temperatures.
(C) Specific conductivity.
(D) Total organic carbon.
(E) Analyses of common ions with a calculated cation/ion balance, such as calcium, magnesium, iron, manganese, sodium sulfate, alkalinity, and chloride.
(iii) The department may require disinfection byproducts monitoring at various entry points to the distribution system to determine if the study conclusions are correct.
(iv) Results of disinfection byproducts monitoring may be used instead of the study if all entry points to the distribution system drawing from the identified aquifer show that the levels are below the MCLs.
(c) Failure to monitor in accordance with the monitoring plan required under subrule (5) of this rule is a monitoring violation.
(d) Failure to monitor will be treated as a violation for the entire period covered by the annual average where compliance is based on a running annual average of monthly or quarterly samples or averages and the supplier's failure to monitor makes it impossible to determine compliance with MCLs or MRDLs.
(e) Suppliers shall use only data collected under this rule to qualify for reduced monitoring.
(2) All of the following provisions are monitoring requirements for disinfection byproducts:
(a) All of the following provisions are TTHM and HAA5 monitoring requirements:
(i) Suppliers shall conduct routine monitoring at the frequency indicated in table 1 of this rule:

Table 1 Routine monitoring frequency for TTHM and HAA5

Type of system	Minimum monitoring frequency	Sample location in the distribution system
Subpart H system serving 10,000 or more people.	4 water samples per quarter per treatment plant.	Not less than 25% of all samples collected each quarter at locations representing maximum residence time. Remaining samples taken at locations representative of at least average residence time in the distribution system and representing the entire distribution system, taking into account the number of persons served, different sources of water, and different treatment methods[1].
Subpart H system serving from 500 to 9,999 people.	1 water sample per quarter per treatment plant.	Locations representing maximum residence time[1].
Subpart H system serving fewer than 500 people.	1 sample per year per treatment plant during month of warmest water temperature.	Locations representing maximum residence time[1]. If the sample (or average of annual samples, if more than 1 sample is taken) exceeds the MCL, the system shall increase monitoring to 1 sample per treatment plant per quarter, taken at a point reflecting the maximum residence time in the distribution system, until the system meets criteria in paragraph (iv) of this subdivision.
System using only ground water not under direct influence of surface water using chemical disinfectant and serving 10,000 or more people.	1 water sample per quarter per treatment plant[2].	Locations representing maximum residence time[1].
System using only ground water not under direct influence of surface water using chemical disinfectant and serving fewer than 10,000 people.	1 sample per year per treatment plant[2] during month of warmest water temperature.	Locations representing maximum residence time[1]. If the sample (or average of annual samples, if more than 1 sample is taken) exceeds the MCL, the system shall increase monitoring to 1 sample per treatment plant per quarter, taken at a point reflecting the maximum residence time in the distribution system, until the system meets criteria in paragraph (iv) of this subdivision.

[1] If a supplier elects to sample more frequently than the minimum required, not less than 25% of all samples collected each quarter, including those taken in excess of the required frequency, shall be taken at locations that represent the maximum residence time of the water in the distribution system. The remaining samples shall be taken at locations representative of at least average residence time in the distribution system.

[2] Multiple wells drawing water from a single aquifer may be considered 1 treatment plant for determining the minimum number of samples required, with department approval.

(ii) Suppliers may reduce monitoring, except as otherwise provided, under table 2 of this rule:

Table 2 Reduced monitoring frequency for TTHM and HAA5

If the system is a...	The supplier may reduce monitoring if the supplier has monitored at least 1 year and the...	To this level
Subpart H system serving 10,000 or more people which has a source water annual average TOC level, before any treatment, that is less than or equal to 4.0 mg/l.	TTHM annual average is less than or equal to 0.040 mg/l and HAA5 annual average is less than or equal to 0.030 mg/l.	1 sample per treatment plant per quarter at distribution system location reflecting maximum residence time.
Subpart H system serving from 500 to 9,999 people which has a source water annual average TOC level, before any treatment, that is less than or equal to 4.0 mg/l.	TTHM annual average is less than or equal to 0.040 mg/l and HAA5 annual average is less than or equal to 0.030 mg/l.	1 sample per treatment plant per year at distribution system location reflecting maximum residence time during month of warmest water temperature. Note: any subpart H system serving fewer than 500 people may not reduce its monitoring to less than 1 sample per treatment plant per year.
System using only ground water not under direct influence of surface water using chemical disinfectant and serving 10,000 or more people.	TTHM annual average is less than or equal to 0.040 mg/l and HAA5 annual average is less than or equal to 0.030 mg/l.	1 sample per treatment plant per year at distribution system location reflecting maximum residence time during month of warmest water temperature.
System using only ground water not under direct influence of surface water using chemical disinfectant and serving fewer than 10,000 people.	TTHM annual average is less than or equal to 0.040 mg/l and HAA5 annual average is less than or equal to 0.030 mg/l for 2 consecutive years, or TTHM annual average is less than or equal to 0.020 mg/l and HAA5 annual average is less than or equal to 0.015 mg/l for 1 year.	1 sample per treatment plant per 3 year monitoring cycle at distribution system location reflecting maximum residence time during month of warmest water temperature, with the 3-year cycle beginning on January 1 following quarter in which system qualifies for reduced monitoring.

(iii) Suppliers of systems on a reduced monitoring schedule may remain on that reduced schedule as long as the average of all samples taken in the year, for systems monitoring quarterly, or the result of the sample, for systems monitoring not more frequently than annually, is not more than 0.060 mg/l and 0.045 mg/l for TTHM and HAA5, respectively. Suppliers of systems that do not meet these levels shall resume monitoring at the frequency identified in the "minimum monitoring frequency" column of table 1 of this rule, in the quarter immediately following the monitoring period in which the system exceeds 0.060 mg/l and 0.045 mg/l for TTHM and HAA5, respectively. For systems using only groundwater not under the direct influence of surface water and serving fewer than 10,000 people, if either the TTHM annual average is greater than 0.080 mg/l or the HAA5 annual average is greater than 0.060 mg/l, the supplier shall increase monitoring to that identified in the "sample location in the distribution system" column of table 1 of this rule in the quarter immediately following the monitoring period in which the system exceeds 0.080 mg/l or 0.060 mg/l for TTHM or HAA5, respectively.
(iv) Suppliers of systems on increased monitoring may return to routine monitoring if, after at least 1 year of monitoring, the TTHM annual average is less than or equal to 0.060 mg/l and the HAA5 annual average is less than or equal to 0.045 mg/l.
(b) Suppliers of community and nontransient noncommunity water systems adding chlorine dioxide shall conduct monitoring for chlorite under all of the following provisions:
(i) All of the following provisions are routine monitoring requirements:
(A) Each day, suppliers shall take samples at the entrance to the distribution system. For any daily sample that exceeds the chlorite MCL, the supplier shall take additional samples in the distribution system the following day at the locations required by paragraph (ii) of this subdivision, in addition to the sample required at the entrance to the distribution system.
(B) Each month, suppliers shall take a 3-sample set in the distribution system. The supplier shall take 1 sample at each of the following locations:
(1) Near the first customer.
(2) At a location representative of average residence time.
(3) At a location reflecting maximum residence in the distribution system.
Any additional routine sampling shall be conducted in the same manner, as 3-sample sets, at the specified locations. The supplier may use the results of additional monitoring conducted under paragraph (ii) of this subdivision to meet the requirement for monitoring in this paragraph.
(ii) On each day following a routine sample monitoring result that exceeds the chlorite MCL at the entrance to the distribution system, the supplier shall take 3 chlorite distribution system samples at each of the following locations:
(A) As close to the first customer as possible.
(B) In a location representative of average residence time.
(C) As close to the end of the distribution system as possible, reflecting maximum residence time in the distribution system.
(iii) Chlorite monitoring at the entrance to the distribution system required by paragraph (i)(A) of this subdivision may not be reduced. Chlorite monitoring in the distribution system required by paragraph (i)(B) of this subdivision may be reduced to 1 3-sample set per quarter after 1 year of monitoring where no individual chlorite sample taken in the distribution system under paragraph (i)(B) of this subdivision has exceeded the chlorite MCL and the supplier has not been required to conduct monitoring under paragraph (ii) of this subdivision. The system may remain on the reduced monitoring schedule until either any of the 3 individual chlorite samples taken quarterly in the distribution system under paragraph (i)(B) of this subdivision exceeds the chlorite MCL or the supplier is required to conduct monitoring under paragraph (ii) of this subdivision, at which time the supplier shall revert to routine monitoring.
(c) Suppliers using ozone shall monitor for bromate by taking 1 sample per month at the entrance to the distribution system for each treatment plant in the system using ozone. Monitoring may not be reduced.
(3) Both of the following provisions are monitoring requirements for disinfectant residuals:
(a) Suppliers of community and nontransient noncommunity water systems adding chlorine or chloramines shall measure the residual disinfectant level in the distribution system at the same point in the distribution system and at the same time as total coliforms are sampled, as specified in R 325.10705 and R 325.10706. Monitoring may not be reduced.
(b) All of the following provisions are chlorine dioxide monitoring requirements:
(i) Suppliers of community, nontransient noncommunity, and transient noncommunity water systems that use chlorine dioxide shall monitor for chlorine dioxide by taking daily samples at the entrance to the distribution system. For any daily sample that exceeds the MRDL, the supplier shall take samples in the distribution system the following day at the locations required by paragraph (ii) of this subdivision, in addition to the sample required at the entrance to the distribution system.
(ii) On each day following a routine sample monitoring result that exceeds the MRDL, the supplier is required to take 3 chlorine dioxide distribution system samples. If chlorine dioxide or chloramines are used to maintain a disinfectant residual in the distribution system, or if chlorine is used to maintain a disinfectant residual in the distribution system and there are no disinfection addition points after the entrance to the distribution system, that is, no booster chlorination, the supplier shall take 3 samples as close to the first customer as possible, at intervals of at least 6 hours. If chlorine is used to maintain a disinfectant residual in the distribution system and there are 1 or more disinfection addition points after the entrance to the

distribution system, that is, booster chlorination, the supplier shall take 1 sample at each of the following locations:
(A) As close to the first customer as possible.
(B) In a location representative of average residence time.
(C) As close to the end of the distribution system as possible, reflecting maximum residence time in the distribution system.
(iii) Chlorine dioxide monitoring may not be reduced.
(4) Monitoring requirements for disinfection byproduct precursors (DBPP) are as follows:
(a) Suppliers of subpart H systems using conventional filtration shall monitor each treatment plant for TOC not later than the point of combined filter effluent turbidity monitoring and representative of the treated water. Suppliers shall also monitor for TOC in the source water before any treatment at the same time as monitoring for TOC in the treated water. These samples (source water and treated water) are referred to as "paired samples." At the same time as the source water sample is taken, suppliers shall monitor for alkalinity in the source water before any treatment. Suppliers shall take 1 paired sample and 1 source water alkalinity sample per month per plant at a time representative of normal operating conditions and influent water quality.
(b) Suppliers of subpart H systems with an average treated water TOC of less than 2.0 mg/l for 2 consecutive years, or less than 1.0 mg/l for 1 year, may reduce monitoring for both TOC and alkalinity to 1 paired sample and 1 source water alkalinity sample per plant per quarter. The supplier shall revert to routine monitoring in the month following the quarter when the annual average treated water TOC is greater than or equal to 2.0 mg/l.
(5) Suppliers subject to this rule shall develop and implement a monitoring plan. The supplier shall maintain the plan and make it available for inspection by the department and the general public not more than 30 days following the applicable compliance dates in subrule (1) of this rule. Suppliers of subpart H systems serving more than 3,300 people shall submit a copy of the monitoring plan to the department not later than the date of the first report required under R 325.10719f. At a minimum, the plan shall include all of the following elements:
(a) Specific locations and schedules for collecting samples for parameters included in R 325.10610, R 325.10610a, R 325.10610b, R 325.10610c, or this rule.
(b) The method the supplier will use to calculate compliance with MCLs, MRDLs, and treatment techniques.
(c) If approved for monitoring as a consecutive system, or if providing water to a consecutive system, under the provisions of R 325.10733, the sampling plan shall reflect the entire distribution system.
History: 2003 MR 2, Eff. Jan. 29, 2003.

R 325.10719f Disinfectant residuals, disinfection byproducts, and disinfection byproduct precursors; reporting and recordkeeping.
Rule 719f. (1) Suppliers required to monitor under R 325.10719e shall report to the department under this rule. Suppliers required to sample quarterly or more frequently shall report to the department within 10 days after the end of each quarter in which samples were collected, notwithstanding the provisions of R 325.10734. Suppliers required to sample less frequently than quarterly shall report to the department within 10 days after the end of each monitoring period in which samples were collected.

(2) Suppliers shall report disinfection byproducts information specified in the following table:

If supplier monitors under R 325.10719e(2) for...	*Supplier shall report...*
(a) TTHM and HAA5 on a quarterly or more frequent basis	(i) The number of samples taken during the last quarter. (ii) The location, date, and result of each sample taken during the last quarter. (iii) The average of all samples taken in the last quarter. (iv) The annual average of the quarterly averages of this section for the last 4 quarters. (v) Whether, based on R 325.10610b(2)(a), the MCL was violated.
(b) TTHM and HAA5 less frequently than quarterly, but at least annually	(i) The number of samples taken during the last year. (ii) The location, date, and result of each sample taken during the last monitoring period. (iii) The average of all samples taken over the last year. (iv) Whether, based on R 325.10610b(2)(a), the MCL was violated.
(c) TTHM and HAA5 less frequently than annually	(i) The location, date, and result of the each sample taken. (ii) Whether, based on R 325.10610b(2)(a), the MCL was violated.
(d) Chlorite	(i) The number of entry point samples taken each month for the last 3 months. (ii) The location, date, and result of each sample (both entry point and distribution system) taken during the last quarter. (iii) For each month in the reporting period, the average of all samples taken in each 3-samples set taken in the distribution system. (iv) Whether, based on R 325.10610b(2)(c), the MCL was violated, in which month, and how many times it was violated each month.
(e) Bromate	(i) The number of samples taken during the last quarter. (ii) The location, date, and result of each sample taken during the last quarter. (iii) The average of the monthly averages of all samples taken in the last year. (iv) Whether, based on R 325.10610b(2)(b), the MCL was violated.

(3) Suppliers shall report disinfectant information specified in the following table:

If supplier monitors under R 325.10719e(3) for...	*supplier shall report...*
(a) Chlorine or chloramines	(i) The number of samples taken during each month of the last quarter. (ii) The monthly average of all samples taken in each month for the last 12 months. (iii) The average of all monthly averages for the last 12 months. (iv) Whether, based on R 325.10610b(3)(a), the MRDL was violated.
(b) Chlorine dioxide	(i) The dates, results, and locations of samples taken during the last quarter. (ii) Whether, based on R 325.10610(3)(b), the MRDL was violated. (iii) Whether the MRDL was exceeded in any 2 consecutive daily samples and whether the resulting violation was a tier 1 or tier 2 violation.

(4) Suppliers shall report disinfection byproduct precursors and enhanced coagulation or enhanced softening information specified in the following table:

If supplier monitors monthly or quarterly for TOC under R 325.10719e(4)...	*Supplier shall report...*
(a) And is required to meet the enhanced coagulation or enhanced softening requirements in R 325.10610c(2)(b) or (c)	(i) The number of paired samples taken during the last quarter. (ii) The location, date, and result of each paired sample and associated alkalinity taken during the last quarter. (iii) For each month in the reporting period that paired samples were taken, the average of the percent reduction of TOC for each paired sample and the required TOC percent removal. (iv) Calculations for determining compliance with the TOC percent removal requirements, as provided in R 325.10610c(3)(a). (v) Whether the system is in compliance with the enhanced coagulation or enhanced softening percent removal requirements in R 325.10610c(2) for the last 4 quarters.
(b) And meets 1 or more of the alternative compliance criteria in R 325.10610c(1)(b) or (c)	(i) The number of paired samples taken during the last quarter. (ii) The location, date, and result of each paired sample and associated alkalinity taken during the last quarter. (iii) The alternative compliance criterion that the system is using. (iv) The running annual average based on monthly averages, or quarterly samples, of source water TOC for systems meeting a criterion in R 325.10610c(1)(b)(i) or (iii) or of treated water TOC for systems meeting the criterion in R 325.10610c(1)(b)(ii). (v) The running annual average based on monthly averages, or quarterly samples, of source water SUVA for systems meeting the criterion in R 325.10610c(1)(b)(v) or of treated water SUVA for systems meeting the criterion in R 325.10610c(1)(b)(vi). (vi) the running annual average of source water alkalinity for systems meeting the criterion in R 325.10610c(1)(b)(iii) and of treated water alkalinity for systems meeting the criterion in R 325.10610c(1)(c)(i). (vii) The running annual average for both TTHM and HAA5 for systems meeting the criterion in R 325.10610c(1)(b)(iii). (viii) The running annual average of the amount of magnesium hardness removal, as calcium carbonate, in mg/l, for systems meeting the criterion in R 325.10610c(1)(c)(ii). (ix) Whether the system is in compliance with the particular alternative compliance criterion in R 325.10610c(1)(b) or (c).

History: 2003 MR 2, Eff. Jan. 29, 2003.

R 325.10720 Filtration and disinfection; filtration sampling requirements
Rule 720. (1) Suppliers of subpart H systems shall monitor under this rule to determine compliance with R 325.10611a and R 325.10611b, except for the systems noted in subrule (4) of this rule.
(2) All of the following provisions are turbidity monitoring requirements:
(a) Suppliers shall collect samples and perform measurements for turbidity at locations representative of filtered water at regular intervals at least once every 4 hours while the treatment plant is in operation.
(b) A public water supplier may substitute continuous turbidity monitoring for grab sample monitoring if the continuous measurement is validated for accuracy on a regular basis using a protocol approved by the department. Readings taken from a continuous recording turbidimeter at regular intervals at least once every 4 hours may be used to determine compliance with the treatment technique under R 325.10611b. The turbidimeter shall be calibrated using the procedure specified by the manufacturer.
(c) Suppliers of systems serving 10,000 or more people and using conventional or direct filtration shall conduct continuous monitoring of turbidity for each individual filter and shall calibrate turbidimeters using the procedure specified by the manufacturer. Suppliers shall record the results of individual filter monitoring every 15 minutes.
(d) If there is a failure in the continuous turbidity monitoring equipment described in subdivision (d) of this subrule, the supplier shall conduct grab sampling every 4 hours instead of continuous monitoring, but for not more than 5 working days after the failure of the equipment.
(3) All of the following provisions are disinfectant residual monitoring requirements at the entry points to the distribution system:
(a) Suppliers of systems serving more than 3,300 people shall monitor for residual disinfectant concentration at an entry point to the distribution system on a continuous basis.
(b) Suppliers of systems serving fewer than 3,301 people shall monitor for residual disinfectant concentration at an entry point to the distribution system at a frequency set forth in table 1 of this rule, and, if more than 1 sample is required per day, suppliers shall collect samples at times evenly spaced throughout the operational day.

Table 1 Residual disinfectant concentration sampling frequencies

System size by population	Samples per day
500 or fewer people	1
501 to 1,000 people	2
1,001 to 2,500 people	3
2,501 to 3,300 people	4

(c) Suppliers shall maintain a residual disinfectant concentration entering the distribution system of not less than 0.2 milligrams per liter. If the residual disinfectant concentration drops below this level at any time, the supplier shall notify the department as soon as possible, but not later than the end of the next business day. In addition, the supplier of water shall notify the department by the end of the next business day whether or not the residual disinfectant concentration was restored to not less than 0.2 milligrams per liter within 4 hours.
(4) When disinfection is required, a supplier shall measure disinfectant residual concentrations on the distribution system at the same points in the distribution system and at such time as samples are collected for coliform analysis. After December 31, 2003, this subrule no longer applies and systems subject to this subrule rule shall comply with the disinfectant residual monitoring requirements under R 325.10719e(3).
History: 1954 ACS 94, Eff. Jan. 12, 1978; 1979 AC; 1991 MR 11, Eff. Nov. 22, 1991; 1993 MR 6, Eff. July 2, 1993; 2003 MR 2, eff. Jan. 29, 2003.

R 325.10720a Filtration and disinfection; reporting and recordkeeping.
Rule 720a. (1) Suppliers required to monitor under R 325.10720 shall comply with reporting and recordkeeping requirements specified in R 325.11502 and shall report to the department the information required in this rule within 10 days after the end of each month the system serves water to the public.
(2) Suppliers shall report turbidity measurements required under R 325.10611b and shall include all of the following information:
(a) The total number of filtered water turbidity measurements taken during the month.
(b) The number and percentage of filtered water turbidity measurements taken during the month that are less than or equal to the turbidity limits under R 325.10611b.
(c) The date and value of any turbidity measurements taken during the month that exceed the following levels:
(i) One ntu for systems serving 10,000 or more people and using conventional filtration, direct filtration, or membrane

filtration.
(ii) Five ntu in systems serving fewer than 10,000 people and using conventional filtration, direct filtration, or membrane filtration.
(iii) Five ntu in systems using diatomaceous earth filtration or slow sand filtration.
(iv) The maximum level set by the department under R 325.10611b(3) for systems using filtration technologies other than conventional filtration, direct filtration, membrane filtration, slow sand filtration, or diatomaceous earth filtration.
(3) Suppliers shall report that they have conducted individual filter turbidity monitoring under R 325.10720(2)(c) and (d). Suppliers shall report individual turbidity measurements only if measurements demonstrate 1 or more of the conditions in subdivisions (a) to (d) of this subrule. Systems that use lime softening may apply to the department for alternative exceedance levels for the levels specified in subdivisions (a) to (d) of this subrule if they can demonstrate that higher turbidity levels in individual filters are due to lime carryover only and not due to degraded filter performance. Individual filter monitoring reporting requirements are as follows:
(a) For any individual filter that has a measured turbidity level of more than 1.0 ntu in 2 consecutive measurements taken 15 minutes apart, the supplier shall report the filter number, the turbidity measurement, and the date or dates on which the exceedance occurred. In addition, the supplier shall either produce a filter profile for the filter within 7 days of the exceedance and report that the profile has been produced, or report the obvious reason for the exceedance.
(b) For any individual filter that has a measured turbidity level of more than 0.5 ntu in 2 consecutive measurements taken 15 minutes apart at the end of the first 4 hours of continuous filter operation after the filter has been backwashed or otherwise taken offline, the supplier shall report the filter number, the turbidity, and the date or dates on which the exceedance occurred. In addition, the supplier shall either produce a filter profile for the filter within 7 days of the exceedance and report that the profile has been produced, or report the obvious reason for the exceedance.
(c) For any individual filter that has a measured turbidity level of more than 1.0 ntu in 2 consecutive measurements taken 15 minutes apart at any time in each of 3 consecutive months, the supplier shall report the filter number, the turbidity measurement, and the date or dates on which the exceedance occurred. In addition, the supplier shall conduct a self-assessment of the filter within 14 days of the exceedance and report that the self-assessment was conducted. The self-assessment shall consist of at least all of the following components:
(i) Assessment of filter performance; development of a filter profile.
(ii) Identification and prioritization of factors limiting filter performance.
(iii) Assessment of the applicability of corrections.
(iv) Preparation of a filter self-assessment report.
(d) For any individual filter that has a measured turbidity level of more than 2.0 ntu in 2 consecutive measurements taken 15 minutes apart at any time in each of 2 consecutive months, the supplier shall report the filter number, the turbidity measurement, and the date or dates on which the exceedance occurred. In addition, the supplier shall arrange for the conduct of a comprehensive performance evaluation by the department or a third party approved by the department no later than 30 days following the exceedance and have the evaluation completed and submitted to the department not later than 90 days following the exceedance.
(4) The supplier shall consult with the department as soon as practical, but not later than 24 hours after the exceedance is known, if the turbidity level of representative samples of filtered water at any time exceeds any of the following levels:
(a) One ntu in a system serving 10,000 or more people and using conventional filtration, direct filtration, or membrane filtration.
(b) Five ntu in a system serving fewer than 10,000 people and using conventional filtration, direct filtration, or membrane filtration.
(c) Five ntu in a system using diatomaceous earth filtration or slow sand filtration.
(d) The maximum level set by the department under R 325.10611b(3) for a system using a filtration technology other than conventional filtration, direct filtration, membrane filtration, slow sand filtration, or diatomaceous earth filtration.
History: 2003 MR 2, Eff. Jan. 29, 2003.

R 325.10721 Rescinded.
History: 1954 ACS 94, Eff. Jan. 12, 1978; 1979 AC; 1991 MR 11, Eff. Nov. 22, 1991; rescinded 2003 MR 2, Eff. Jan. 29, 2003.

R 325.10724
Source: 1997 AACS.

R 325.10728
Source: 1989 AACS.

R 325.10734
Source: 2002 AACS.

R 325.10736
Source: 2002 AACS.

R 325.10737
Source: 1997 AACS.

R 325.10738
Source: 2002 AACS.

PART 8. GROUNDWATER SOURCES

R 325.10822
Source: 1991 AACS.

R 325.10831
Source: 1991 AACS.

R 325.10833
Source: 1997 AACS.

PART 10. TREATMENT SYSTEMS AND PUMPING FACILITIES

R 325.11002 Applicability; approval of deviations from minimum standards and requirements.
Rule 1002. (1) The provisions of this part apply to subpart H systems, to certain other treatment systems, and to all water pumping facilities. These rules are standards and requirements which shall be considered by the department when issuing permits or approvals for waterworks systems.
(2) Deviations from the minimum standards and requirements prescribed by this part may be approved by the department upon a showing by an owner of a public water supply that the deviation will not adversely affect public health.
(3) Any deviations to the requirements for treatment of water sources shall not be in conflict with these rules.
History: 1954 ACS 94, Eff. Jan. 12, 1978; 1979 AC; 1991 MR 11, Eff. Nov. 22, 1991; 2003 MR 2, Eff. Jan. 29, 2003.

R 325.11004 Rescinded.
History: 1954 ACS 94, Eff. Jan. 12, 1978; 1979 AC; 1991 MR 11, Eff. Nov. 22, 1991; 1994 MR 12, Eff. Jan. 5, 1995; rescinded 2003 MR 2, Eff. Jan. 29, 2003.

R 325.11008 Complete treatment system; design and operation requirements.
Rule 1008. (1) A minimum of 2 units shall be provided for each treatment process for coagulation, sedimentation, and filtration.
(2) A sufficient primary coagulant dose shall be added to create a settleable or filterable floc at all times that a conventional filtration or direct filtration plant is in operation.
(3) Essential chemical systems for the application of disinfectants, primary coagulants, and other chemicals, as required by the department, shall be equipped to provide service at the maximum allowable treatment rate with the largest unit removed from service.
(4) Equipment provided for disinfection required under subrule (3) of this rule shall be capable of treatment at the rated treatment capacity with the largest unit removed from service.
(5) Application points for disinfection shall be provided, or be available, at all of the following locations:
(a) Before coagulation.
(b) Immediately preceding filtration.
(c) Immediately following filtration.
(d) Immediately before entry of finished water into the distribution system.
(6) Each unit or element of a complete treatment system shall be provided with a means to remove it from service without interrupting the treatment process. However, a complete bypass of the coagulation, sedimentation, or filtration processes is

prohibited.
(7) Each unit or element of a complete treatment system shall be provided with a means to drain and with overflow control sufficient to prevent flooding of the facility.
(8) Common walls between finished water and water of lesser quality are prohibited.
(9) Each complete treatment system shall be provided with a means to measure the volume and rate of raw water supplied and finished water produced.
(10) A complete treatment system shall be protected from the highest recorded flood elevation or the 100-year flood elevation, whichever is greater.
(11) Components of a complete treatment system which are essential for the protection of the public health and which are required for the production of drinking water on a continuous basis shall be protected from flooding.
History: 1954 ACS 94, Eff. Jan. 12, 1978; 1979 AC; 1991 MR 11, Eff. Nov. 22, 1991; 2003 MR 2, Eff. Jan. 29, 2003.

R 325.11009 Rescinded.
History: 1954 ACS 94, Eff. Jan. 12, 1978; 1979 AC; rescinded 2003 MR 2, Eff. Jan. 29, 2003.

PART 11. DISTRIBUTION SYSTEMS AND STORAGE TANKS

R 325.11110
Source: 1991 AACS.

R 325.11117
Source: 1991 AACS.

PART 14. CROSS-CONNECTIONS

R 325.11404
Source: 1998-2000 AACS.

R 325.11405
Source: 1998-2000 AACS.

R 325.11406
Source: 1998-2000 AACS.

PART 15. OPERATION REPORTS AND RECORDKEEPING

R 325.11502 Monthly operation reports required from suppliers of water employing treatment.
Rule 1502. (1) A supplier of water of a community water system where treatment is employed or of a noncommunity water system where treatment is employed for public health purposes shall prepare an operation report on a form provided by the department for each month of operation. The report shall identify areas where data entry is required under R 325.10719e, R 325.10719f, R 325.10720, and R 325.10720a and shall include all of the following information:
(a) General operation data, including turbidity determinations.
(b) A summary of samples analyzed, including distribution system sampling and residual disinfectant concentration.
(c) Information on daily treatment system pumpage.
(d) Information on chemical application.
(e) Analyses of general parameters relating to the quality of the treated drinking water.
(2) The operation report shall be submitted to the department during the month following the month for which the operation report was prepared, unless otherwise noted in part 7 of these rules.
History: 1954 ACS 94, Eff. Jan. 12, 1978; 1979 AC; 1991 MR 11, Eff. Nov. 22, 1991; 2003 MR 2, Eff. Jan. 29, 2003.

R 325.11503 Rescinded.
History: 1954 ACS 94, Eff. Jan. 12, 1978; 1979 AC; 1991 MR 11, Eff. Nov. 22, 1991; rescinded 2003 MR 2, Eff. Jan. 29, 2003.

R 325.11505a Submission of C * T calculations.
Rule 1505a. A supplier of water who employs a disinfectant shall, within 6 months of a written request from the department,

submit a determination of the C*T calculations. The supplier of water shall submit the supporting data as necessary for the department to determine compliance with the provisions of R 325.10611a(2)(a).
History: 1991 MR 11, Eff. Nov. 22, 1991; 2003 MR 2, Eff. Jan. 29, 2003.

R 325.11506 Retention of records.
Rule 1506. (1) A supplier of a community or noncommunity water system shall retain, on its premises or at a convenient location near its premises, all of the following records:
(a) Records of bacteriological analyses that are required pursuant to the provisions of part 7 of these rules, which shall be kept for not less than 5 years.
(b) Records of chemical analyses that are required pursuant to the provisions of part 7 of these rules, which shall be kept for not less than 10 years.
(c) Records of turbidity analyses that are required pursuant to the provisions of part 7 of these rules, which shall be kept for not less than 3 years.
(d) Records of radiological analyses that are required pursuant to the provisions of part 7 of these rules, which shall be kept for not less than 10 years.
(e) Original records of all sampling data and analyses, reports, surveys, letters, evaluations, schedules, department determinations, and any other information that is required pursuant to the provisions of R 325.10604f(2) to (4), which shall be retained for not less than 12 years.
(2) Actual laboratory reports for chemical, bacteriological, turbidity, and radiological analyses shall be kept; however, the analyses data may be transferred to tabular summaries if all of the following information is included:
(a) The date, place, and time of sampling and the name of the person who collected the sample.
(b) Identification of the sample as a routine distribution system sample, check sample, raw or treated water sample, or other special purpose sample.
(c) The date of the analysis.
(d) The laboratory and the person who was responsible for performing the analysis.
(e) The analytical technique or method used.
(f) The results of the analysis.
(3) Records of action taken by the supplier to correct violations of the state drinking water standards shall be kept for not less than 3 years after the last action taken with respect to the particular violation.
(4) Copies of any written reports, summaries, or communications which relate to sanitary surveys of the public water supply and which were conducted by the public water supply itself, by a private consultant, by the division, or by any local, state, or federal agency shall be kept for not less than 10 years after completion of the sanitary survey involved.
(5) Records that involve a variance or an exemption that was granted to a public water supply shall be kept for not less than 5 years after the expiration date of the variance or exemption.
(6) Records that involve any emergency or public notification regarding a public water supply shall be kept for not less than 3 years after the emergency or public notification.
History: 1954 ACS 94, Eff. Jan. 12, 1978; 1979 AC; 1994 MR 12, Eff. Jan. 5, 1995; 2002 MR 10, Eff. May 30, 2002; 2003 MR 2, Eff. Jan. 29, 2003.

PART 19. EXAMINATION AND CERTIFICATION OF OPERATORS

R 325.11901
Source: 1998-2000 AACS.

R 325.11902
Source: 1998-2000 AACS.

R 325.11903
Source: 1998-2000 AACS.

R 325.11904
Source: 1998-2000 AACS.

R 325.11905
Source: 1998-2000 AACS.

R 325.11906

Source: 1998-2000 AACS.

R 325.11906a
Source: 1998-2000 AACS.

R 325.11906b
Source: 1998-2000 AACS.

R 325.11907
Source: 1991 AACS.

R 325.11908
Source: 1998-2000 AACS.

R 325.11909
Source: 1991 AACS.

R 325.11910
Source: 1998-2000 AACS.

R 325.11911
Source: 1998-2000 AACS.

R 325.11912
Source: 1998-2000 AACS.

R 325.11913
Source: 1998-2000 AACS.

R 325.11914
Source: 1998-2000 AACS.

R 325.11915
Source: 1998-2000 AACS.

R 325.11915a
Source: 1998-2000 AACS.

R 325.11916
Source: 1997 AACS.

R 325.11917
Source: 1998-2000 AACS.

PART 27. LABORATORY CERTIFICATION

R 325.12701
Source: 1994 AACS.

R 325.12702
Source: 1998-2000 AACS.

R 325.12705
Source: 1998-2000 AACS.

R 325.12706
Source: 1994 AACS.

PART 28. WELLHEAD PROTECTION GRANT ASSISTANCE

R. 325.12801
Source: 1998-2000 AACS.

R 325.12802
Source: 1998-2000 AACS.

R 325.12803
Source: 1998-2000 AACS.

R 325.12804
Source: 1998-2000 AACS.

R 325.12805
Source: 1998-2000 AACS.

R 325.12806
Source: 1998-2000 AACS.

R 325.12807
Source: 1998-2000 AACS.

R 325.12808
Source: 1998-2000 AACS.

R 325.12809
Source: 1998-2000 AACS.

R 325.12810
Source: 1998-2000 AACS.

R 325.12811
Source: 1998-2000 AACS.

R 325.12812
Source: 1998-2000 AACS.

R 325.12813
Source: 1998-2000 AACS.

R 325.12814
Source: 1998-2000 AACS.

R 325.12815
Source: 1998-2000 AACS.

R 325.12816
Source: 1998-2000 AACS.

R 325.12817
Source: 1998-2000 AACS.

R 325.12818
Source: 1998-2000 AACS.

R 325.12819
Source: 1998-2000 AACS.

R 325.12820
Source: 1998-2000 AACS.

DEPARTMENT OF COMMUNITY HEALTH

OFFICE OF LOCAL HEALTH SERVICES

LOCAL HEALTH PERSONNEL

R 325.13001
Source: 1980 AACS.

R 325.13002
Source: 1980 AACS.

R 325.13003
Source: 1980 AACS.

R 325.13004
Source: 1980 AACS.

R 325.13005
Source: 1980 AACS.

R 325.13006
Source: 1980 AACS.

R 325.13007
Source: 1980 AACS.

R 325.13008
Source: 1980 AACS.

R 325.13009
Source: 1980 AACS.

COST-SHARED SERVICES

R 325.13051
Source: 1981 AACS.

R 325.13053
Source: 1981 AACS.

R 325.13055
Source: 1981 AACS.

R 325.13057
Source: 1981 AACS.

R 325.13059
Source: 1981 AACS.

R 325.13061
Source: 1981 AACS.

R 325.13063

Source: 1981 AACS.

R 325.13065
Source: 1981 AACS.

R 325.13067
Source: 1981 AACS.

R 325.13069
Source: 1981 AACS.

R 325.13071
Source: 1981 AACS.

DIVISION OF CHILD HEALTH

VISION SCREENING AND TESTING

R 325.13091
Source: 1981 AACS.

R 325.13092
Source: 1981 AACS.

R 325.13093
Source: 1981 AACS.

R 325.13094
Source: 1981 AACS.

R 325.13095
Source: 1981 AACS.

R 325.13096
Source: 1981 AACS.

DEPARTMENT OF CONSUMER AND INDUSTRY SERVICES

BUREAU OF HEALTH FACILITIES

HOSPICE

PART 1. GENERAL PROVISIONS

R 325.13101 Definitions.
Rule 101.(1) As used in these rules:
(a) "Applicant" means a person applying to the department for a hospice license.
(b) "Bereavement services" means those services provided to the family to assist them in coping with the death of the patient.
(c) "Change of ownership," for purposes of section 20142(3) of the code, means a transfer of the property of a hospice from one owner to another, where the new owner will use the transferred property as a hospice operated by the new owner subsequent to the transfer.
(d) "Code" means 1978 PA 368, MCL 333.1101 et seq.
(e) "Department" means the department of consumer and industry services.
(f) "Distinct hospice administration" means an identifiable administrative group which has a distinct organizational structure and which is accountable to a governing body, either directly or through the governing body's chief executive officer, for all aspects of the hospice.
(g) "Governing body" means any of the following:
(i) The policy-making body of a hospice, which is a government agency.

(ii) The board of directors or trustees of a hospice which is a not-for-profit corporation.
(iii) The board of directors of a hospice which is a business corporation.
(iv) The proprietor or owners of a hospice which is a solely owned business or partnership.
(h) "Hospice" means a program which provides palliative and supportive services to meet physical, psychological, social, and spiritual needs of patients and their families in the home, health care facilities, or other residential settings.
(i) "Hospice administrator" means a person who is responsible to the governing body, either directly or through the governing body's chief executive officer, for the administrative operation of a hospice.
(j) "Hospice patient" or "patient" means an individual in the terminal stage of illness who has an anticipated life expectancy of 6 months or less and who, alone or in conjunction with a family member or members, has voluntarily requested admission and been accepted into a hospice.
(k) "Hospice patient's family" means the hospice patient's immediate relations, including a spouse, brother, sister, child, or parent. In addition, other relations and individuals with significant personal ties to the hospice patient may be designated as members of the hospice patient's family by mutual agreement between the hospice patient, the relation or individual, and the hospice organization. The patient-family unit shall be considered the unit of care throughout these rules.
(l) "Hospice patient-family record" means written medical and health information pertaining to services rendered the patient-family unit by a hospice.
(m) "Hospice residence" means a hospice residence as defined by section 21401(1)(B) of the code.
(n) "Hospice staff" means the individuals who work, with or without remuneration, for the hospice.
(o) "Interdisciplinary care team" means a group composed of qualified individuals who collectively have expertise in assessing the special needs of the hospice patient-family unit.
(p) "Licensee" means a program or residence that possesses a currently valid hospice license.
(q) "Ownership interest" means the ownership or control of 5% or more of the equity in the capital or stock, or interest in the profits, of a hospice.
(r) "Physician" means a physician licensed under part 170 or 175 of the code.
(s) "Sale of a hospice" means a change in ownership by sale.
(2) The definitions and principles of construction in articles 1 and 17 and part 214 of 1978 PA 368, MCL 333.1101 et seq., 333.20101 et seq., and 333.21401 et seq. apply to these rules.
History: 1984 MR 10, Eff. Oct. 31, 1984; 2003 MR 7, Eff. Apr. 9, 2003.

R 325.13102 State, federal, and local laws, rules, codes, and ordinances; compliance.
Rule 102. A hospice and its hospice residence, if applicable, which is licensed or certified shall comply with applicable state and federal laws and rules and shall furnish evidence as the department may require to show compliance with the laws and rules and applicable local rules, codes, and ordinances.
History: 1984 MR 10, Eff. Oct. 31, 1984; 2003 MR 7, Eff. Apr. 9, 2003.

R 325.13104 Patient-family unit; rights and responsibilities policy; adoption of written procedure required.
Rule 104. (1) A hospice and its hospice residence, if applicable, shall adopt written policies and procedures to implement the rights and responsibilities of the patient-family unit as provided by section 20201(1) and (2) of the code. Before and following the patient-family unit's admission, the policy and procedures shall be available upon request.
(2) The procedures shall include a mechanism for the initiation, investigation, and resolution of complaints, subject to department approval, and, at a minimum, all of the following:
(a) A statement that a patient-family unit may complain to the hospice, hospice residence, or the department about any condition, event, or procedure in the hospice and its hospice residence, if applicable, without citing a specific violation of the code or these rules.
(b) A procedure for submitting written complaints to the hospice and its hospice residence, if applicable, including a procedure to assist a complainant in reducing an oral complaint to writing, when the oral complaint is not resolved to the satisfaction of the complainant.
(c) The name, title, location, and telephone number of the individual in the hospice and its hospice residence, if applicable, who is responsible for receiving complaints and conducting complaint investigations and a procedure for communicating with that individual.
(d) A requirement that all complaints be investigated within 5 working days following receipt of a complaint by the hospice and its hospice residence, if applicable, and a requirement that, within 15 working days following receipt of the complaint, the hospice and its hospice residence, if applicable, shall deliver to the complainant a written report of the results of the investigation.
(e) A mechanism for appealing the matter to the administrator of the hospice and its hospice residence, if applicable, if the complainant is not satisfied with the investigation or resolution of the complaint.

(3) A hospice and its hospice residence, if applicable, shall maintain written complaints filed under its complaint procedure and all complaint investigation reports delivered to each complainant for 3 years. The records shall be available to the department upon request.
History: 1984 MR 10, Eff. Oct. 31, 1984; 2003 MR 7, Eff. Apr. 9, 2003.

R 325.13105 Complaints to the department.
Rule 105. (1) When a person files a written complaint against, and requests investigation of, a hospice and its hospice residence, if applicable, pursuant to section 20176 of the code, the complaint, if alleging a nonrecurring violation, shall be made within 12 months of the discovery of the violation or, if the complaint has been initially filed with the hospice and its hospice residence, if applicable, within 12 months following a final determination in the matter by the hospice and its hospice residence, if applicable. A complaint, if alleging a recurring violation, shall be made within 12 months of the last alleged occurrence cited in the complaint or within 12 months following a final determination in the matter by the hospice and its hospice residence, if applicable.
(2) If a complaint is not filed within the 12-month period specified in subrule (1) of this rule, the department may consider the complaint based upon information supplied by the complainant as to the reasons for the failure to file within the 12-month period.
(3) Complaints shall be in writing, shall be signed by the complainant, and shall indicate the name and address of the hospice and its hospice residence, if applicable, the nature of the complaint, and the complainant's name, address, and telephone number. If a complaint is oral, the department shall have the option of determining what, if any, action it will take in investigating the complaint.
(4) Anonymous complaints shall be received and evaluated. The department may investigate anonymous complaints.
(5) A complainant who is dissatisfied with the written determination or investigation by the department may appeal as provided by section 20176(2) of the code.
History: 1984 MR 10, Eff. Oct. 31, 1984; 2003 MR 7, Eff. Apr. 9, 2003.

R 325.13106 Governing body; duties and responsibilities.
Rule 106. (1) A hospice and its hospice residence, if applicable, shall have a clearly defined, organized governing body which shall assume full legal responsibility for the overall conduct and operation of the hospice and its hospice residence, if applicable, including quality of care and services.
(2) The governing body shall be responsible for the establishment of policies and procedures for the management, operation, and evaluation of the hospice and its hospice residence, if applicable.
(3) The governing body shall meet at sufficient intervals to carry out its legal obligations and shall keep a written record of its actions.
(4) The governing body shall not enter into any agreement limiting its responsibility.
(5) The governing body shall appoint a hospice administrator and shall delegate to the administrator the authority for operating the hospice in accordance with policies established by the governing body.
(6) The governing body shall provide for medical direction of the hospice and its hospice residence, if applicable, through a physician or group of physicians who are currently licensed under part 170 or 175 of the code to practice in the state of Michigan.
(7) If the hospice organization and its hospice residence, if applicable, discontinues operation of the hospice for any reason, the governing body shall comply with the appropriate provisions set forth in R 325.13109(1)(t)(vi).
History: 1984 MR 10, Eff. Oct. 31, 1984; 2003 MR 7, Eff. Apr. 9, 2003.

R 325.13107 Hospice administrators; duties.
Rule 107. (1) The hospice administrator shall direct the hospice and its hospice residence, if applicable, and ensure implementation of policies and procedures regarding all activities and patient-family unit care services provided in the hospice and its hospice residence, if applicable, whether provided through staff employed directly by the hospice and its hospice residence, if applicable, by volunteers, or through contract arrangement.
(2) The hospice administrator shall designate, in writing, an alternate to act in his or her absence.
(3) The hospice administrator shall implement administrative policies and procedures which include personnel policies and which are applicable to all hospice and its hospice residence, if applicable, staff.
(4) The hospice administrator shall implement financial policies and procedures, approved by the governing body, according to sound business practice, including, but not limited to, all of the following:
(a) Payroll.
(b) Budget.
(c) Accepting and accounting for gifts and donations.

(d) Keeping and submitting such reports and records as required by the department and other authorized agencies.
History: 1984 MR 10, Eff. Oct. 31, 1984; 2003 MR 7, Eff. Apr. 9, 2003.

R 325.13108 Services generally.
Rule 108. As the needs of the hospice and its hospice residence, if applicable, and its patient-family units dictate, the services of qualified personnel, who need not be salaried employees, shall be made available in all of the following disciplines:
(a) Medical care.
(b) Nursing care.
(c) Social work.
(d) Spiritual care.
History: 1984 MR 10, Eff. Oct. 31, 1984; 2003 MR 7, Eff. Apr. 9, 2003.

R 325.13109 Development of policies and procedures for home or inpatient care and services program provided by a hospice and its hospice residence, if applicable.
Rule 109. (1) Written policies and procedures shall be developed to coordinate a program for home or inpatient care and services provided by a hospice and its hospice residence, if applicable. The written policies and procedures shall include all of the following:
(a) Philosophy and objectives.
(b) Patient-family unit rights and responsibilities.
(c) Medical direction.
(d) Admissions, transfers, and discharges of the patient-family unit.
(e) Types of services provided and the coordination of those services, including inpatient care and follow-up.
(f) Quality assurance programs.
(g) Determining the number and types of staff and volunteers needed.
(h) Position descriptions for each category of employed, volunteer, or contracted personnel.
(i) Orientation and staff development to all personnel, including volunteers.
(j) Functions of interdisciplinary care team.
(k) Medical services.
(l) Nursing services.
(m) Nutrition services.
(n) Pharmaceutical services.
(o) Bereavement services.
(p) Social work services.
(q) Volunteer services.
(r) Informed consent.
(s) Availability of a staff member, 24 hours a day, 7 days a week, to a patient-family unit.
(t) A hospice patient-family unit record relating to all of the following:
(i) Documentation by staff of services rendered to patient-family units.
(ii) Confidentiality of medical information.
(iii) Release of information or the provision of copies of the information to patient-family units or authorized persons upon written consent of the patient or guardian.
(iv) Transfer of medical information to another hospice program or inpatient unit.
(v) Records retention for a period of not less than 5 years following death or discharge or, in the case of a minor, 3 years after the individual comes of age under state law, whichever is longer.
(vi) Notification to the department regarding storage of records if the hospice ceases to operate.
(2) All policies and procedures shall be reviewed and shall be revised, if necessary, annually.
(3) All policies and procedures shall be immediately available for on-site inspection by the department.
History: 1984 MR 10, Eff. Oct. 31, 1984; 2003 MR 7, Eff. Apr. 9, 2003.

R 325.13110 Patient rights and responsibilities policy; transmittal of information to patient-family unit; provision of hospice and hospice residence rules and regulations to patient-family unit required.
Rule 110. (1) A hospice and its hospice residence, if applicable, shall develop, adopt, post in a public place, distribute, and implement a policy on the rights and responsibilities of hospice patient-family units in accordance with the requirements of sections 20201, 20202, and 20203 of the code.
(2) A hospice and its hospice residence, if applicable, shall assure that information transmitted to a patient-family unit will be communicated in a manner that will reasonably ensure that the information is understood by the patient-family unit.

(3) The hospice and its hospice residence, if applicable, shall assure that a patient-family unit is provided with information about the hospice rules and regulations affecting patient care and conduct. The hospice and its hospice residence, if applicable, shall provide a written copy of the hospice and its hospice residence, if applicable, rules and regulations to the patient-family unit upon request or admission and when the rules and regulations are changed.
History: 1984 MR 10, Eff. Oct. 31, 1984; 2003 MR 7, Eff. Apr. 9, 2003.

R 325.13111 Quality assurance program.
Rule 111. (1) The hospice and its hospice residence, if applicable, shall develop and implement, through an interdisciplinary committee, an ongoing quality assurance program which will monitor activities and identify problems.
(2) The committee shall adopt or develop professional standards which, at a minimum, shall address all of the following:
(a) Interdisciplinary team services.
(b) Patient and family as the unit of care.
(c) Symptom control.
(d) Continuity of care.
(e) Home care services.
(f) Inpatient services.
(3) The committee shall do all of the following:
(a) Collect and analyze data.
(b) Recommend change when necessary.
(c) Recommend reevaluation when necessary.
History: 1984 MR 10, Eff. Oct. 31, 1984; 2003 MR 7, Eff. Apr. 9, 2003.

PART 2. LICENSURE

R 325.13201 Hospice and hospice residence; establishing, maintaining, or operating without license prohibited.
Rule 201. A person shall not establish, maintain, or operate a hospice and its hospice residence, if applicable, unless licensed by the department in accordance with section 21411 of the code and these rules.
History: 1984 MR 10, Eff. Oct. 31, 1984; 2003 MR 7, Eff. Apr. 9, 2003.

R 325.13202 Time of application.
Rule 202. An application for initial licensure shall be made to the department not less than 90 days before the hospice's and its hospice residence's, if applicable, anticipated opening date. An application for renewed licensure shall be submitted to the department not less than 90 days before the expiration of the current license.
History: 1984 MR 10, Eff. Oct. 31, 1984; 2003 MR 7, Eff. Apr. 9, 2003.

R 325.13203
Source: 1984 AACS.

R 325.13204
Source: 1984 AACS.

R 325.13205 Surveys and investigations.
Rule 205. (1) The department shall conduct a survey and investigation of a hospice for initial licensure within the 3-month period following receipt of the application. An initial hospice license shall only be issued if the department, after completing a survey and investigation, finds the hospice to be in substantial compliance with the requirements of the code and these rules. An initial hospice residence license may be issued subject to a survey and investigation following its opening.
(2) The department may make additional visits, inspections, and investigations for the purpose of survey, evaluation, consultation, complaint investigation, or enforcement of these rules and the code.
(3) Surveys and investigations by the department pursuant to this part may include all of the following:
(a) Inspections of applicable programs and their operation.
(b) Inspection and copying of books, records, patient-family unit medical records, and other documents maintained by the hospice and its hospice residence, if applicable.
(c) The acquisition of other information from any other person who may have information bearing on the applicant's or licensee's compliance or ability to comply with the applicable requirements for licensure.
(4) When making a survey or investigation, the department representative or representatives shall, upon request, present proper identification. For this purpose, "proper identification" means a card issued by the department certifying that the

holder is an employee of the department.
History: 1984 MR 10, Eff. Oct. 31, 1984; 2003 MR 7, Eff. Apr. 9, 2003.

R 325.13206 Disclosure of ownership interests.
Rule 206. (1) An applicant or licensee shall include all of the following information with its application for an initial or renewed license:
(a) The name, address, principal occupation, and official position of all persons who have an ownership interest in the hospice and its hospice residence, if applicable.
(b) The name, address, principal occupation, and official position of each trustee for a voluntary nonprofit corporation.
(c) If a hospice is located on or in leased real estate, the name of the lessor and any direct or indirect interest of the applicant or licensee.
(2) The department may accept ownership interest reports filed with the securities and exchange commission in place of the information required in subrule (1) of this rule, if the department determines that the reports contain the information required.
History: 1984 MR 10, Eff. Oct. 31, 1984; 2003 MR 7, Eff. Apr. 9, 2003.

R 325.13207 Administrator; responsibilities as hospice and its hospice residence, if applicable, agent.
Rule 207. An application for an initial or renewed license or certification shall be signed by the owner or hospice administrator. The hospice administrator shall act as agent for the owner or owners with respect to doing any of the following:
(a) Submitting the application and making amendments thereto.
(b) Providing the department with all information necessary for a determination with respect to the application.
(c) Entering into agreements with the department in connection with licensure or certification.
(d) Receiving notice and service of process on behalf of the applicant in matters relating to licensure or certification.
History: 1984 MR 10, Eff. Oct. 31, 1984; 2003 MR 7, Eff. Apr. 9, 2003.

R 325.13208 Action on applications for licensure.
Rule 208. (1) With respect to any application for licensure, on the basis of the information supplied by the applicant or any other information available to it, including hospice and its hospice residence, if applicable, surveys and investigations, the department shall take 1 of the following actions:
(a) Issue the license.
(b) Issue a temporary unrenewable permit.
(c) Deny an initial or renewed license.
(d) Take other action consistent with the purposes of the code.
(2) Action by the department pursuant to subrule (1)(b) or (c) of this rule shall be preceded by a notice of intent and an opportunity for a hearing. In all other cases, the determination of the department is final.
History: 1984 MR 10, Eff. Oct. 31, 1984; 2003 MR 7, Eff. Apr. 9, 2003.

R 325.13209 Rescinded.
History: 1984 MR 10, Eff. Oct. 31, 1984; 2003 MR 7, Eff. Apr. 9, 2003.

R 325.13210
Source: 1984 AACS.

R 325.13211 Notice to department of change in information required; transfer of license; posting.
Rule 211. (1) An applicant or licensee shall give written notice to the department within 5 business days of any change in information submitted as part of an application for initial or renewed licensure.
(2) A license is not transferable.
(3) The current license shall be posted in a conspicuous public place in the hospice and its hospice residence, if applicable, office. For purposes of this rule, the term "license" includes a limited license or a temporary permit.
History: 1984 MR 10, Eff. Oct. 31, 1984; 2003 MR 7, Eff. Apr. 9, 2003.

R 325.13212 Prohibited terms.
Rule 212. In addition to the terms limited by the code, the use of the words "state approved" or words having a similar meaning is prohibited unless the hospice and its hospice residence, if applicable, is operated under a current license.
History: 1984 MR 10, Eff. Oct. 31, 1984; 2003 MR 7, Eff. Apr. 9, 2003.

R 325.13213 Public inspection of license records.
Rule 213. (1) Unless otherwise provided by law, records pertaining to licensure and certification are available for public inspection and copying during business hours on the days when the department is open for business.
(2) The department shall delete from licensing and certification records made available for inspection any matters or items of information exempt from disclosure under law. Fees related to requests for inspection or copies of licensing and certification records shall be assessed in accordance with applicable law and department procedure.
(3) Arrangements for the inspection or copying of licensing and certification records shall be made with the department.
History: 1984 MR 10, Eff. Oct. 31, 1984; 2003 MR 7, Eff. Apr. 9, 2003.

PART 3. SERVICES

R 325.13301 Contractual services.
Rule 301. (1) A hospice and its hospice residence, if applicable, may contract with other health care providers or appropriate parties for the provision of care and services when the hospice and/or its hospice residence, if applicable, does not have sufficient qualified staff or available adequate equipment to render such services directly. Contracts for shared services shall be written and shall clearly delineate the authority and responsibility of the contracting parties. Contracts with providers shall maintain the responsibility of the hospice and its hospice residence, if applicable, for coordinating and administering the hospice and its hospice residence, if applicable, program.
(2) The hospice administrator shall maintain responsibility for coordinating and administering the hospice program.
(3) Any and all personnel provided to the hospice and its hospice residence, if applicable, under the terms of contracted services shall be licensed or credentialed as required by law.
(4) All contracts shall include financial arrangements and charges, including donated services.
(5) All contracts shall state the availability of service.
(6) A contracted service shall not absolve the hospice from responsibility for the quality, availability, documentation, or overall coordination of patient-family unit care or responsibility for compliance with any federal, state, or local law or rules and regulations.
(7) All contracts shall be reviewed annually and revised if necessary.
(8) All contracts shall be signed and dated by the administrator and the duly authorized official of the agency providing the contractual service.
(9) All contracts shall state that the contractor will provide services to the patient in accordance with the patient care plan developed by the hospice.
(10) Employees of an agency providing a contractual service shall not seek or accept reimbursement in addition to that due the agency for the actual service delivered.
(11) All contracts shall prohibit the sharing of fees between a referring agency or individual and the hospice and its hospice residence, if applicable.
History: 1984 MR 10, Eff. Oct. 31, 1984; 2003 MR 7, Eff. Apr. 9, 2003.

R 325.13302 Medical services.
Rule 302. (1) At the time of admission to the hospice program and its hospice residence, if applicable, and thereafter, a patient shall be under the care of a physician who shall be responsible for providing or arranging for medical care. This physician may be the attending physician.
(2) The physician providing the medical care to a patient shall be responsible for the direction and quality of medical care rendered to that patient.
(3) The physician shall review the patient's medical history and physical assessment within 48 hours before or following the patient's admission to the program.
(4) The physician shall do both of the following:
(a) Validate the prognosis and life expectancy of the patient.
(b) Assist in developing the care plan of the patient.
(5) Medical care shall emphasize prevention and control of pain and other distressing symptoms.
(6) Physician-patient/family encounters shall be at least as frequent as described in the written plan of care.
(7) All physician orders and the services rendered shall be entered in the patient and family record.
(8) The hospice and its hospice residence, if applicable, shall arrange with a physician or group of physicians to provide the development and coordination of the medical care to ensure the adequacy and appropriateness of the medical services.
(9) The hospice and its hospice residence, if applicable, shall arrange for the availability of medical services 24 hours a day, 7 days a week.
History: 1984 MR 10, Eff. Oct. 31, 1984; 2003 MR 7, Eff. Apr. 9, 2003.

R 325.13303 Physicians' assistants services.
Rule 303. (1) A physician's assistant working under the supervision of a licensed approved physician, as set forth in part 170 or 175 of the code, may carry out appropriate delegated functions in a hospice and its hospice residence, if applicable, in accordance with written policies of the hospice and its hospice residence, if applicable, which are formally adopted by the governing body, owner, or operator.
(2) The written policies governing the functioning of the physician's assistant within the hospice and its hospice residence, if applicable, shall be consistent with law and rules applicable to the hospice and its hospice residence, if applicable, the physician's assistant, and the supervising physician.
(3) The physician's assistant shall not substitute for the licensed physician insofar as the overall responsibility for a patient's care is concerned.
(4) The attending physician supervising a physician's assistant shall do all of the following:
(a) Visit the patient at intervals prescribed in R 325.13302(6).
(b) Check, renew, or amend physician assistant's orders at prescribed intervals.
(c) Review and participate in the development of patient care plans following admission and at prescribed intervals.
(d) Review, approve, and countersign all physician assistant entries in the patient-family unit record. Orders written by the physician's assistant shall be countersigned by the attending supervising physician within 48 hours.
History: 1984 MR 10, Eff. Oct. 31, 1984; 2003 MR 7, Eff. Apr. 9, 2003.

R 325.13304 Nursing services.
Rule 304. (1) Nursing services in a hospice and its hospice residence, if applicable, shall be available directly or by written agreement 7 days a week, 24 hours per day and shall be under the supervision of a director of nursing who is registered and licensed in the state of Michigan.
(2) Written policies and procedures for nursing services shall be developed by the director of nursing and implemented incorporating objectives and maintaining standards of nursing practice.
(3) The development of a comprehensive patient care plan for each hospice and its hospice residence, if applicable, patient-family unit shall commence within 24 hours of admission.
(4) The patient care plan shall be established by the hospice and its hospice residence, if applicable, designated interdisciplinary care team composed of, at a minimum, all of the following:
(a) Physician.
(b) Registered nurse.
(c) Social worker.
(d) A spiritual advisor, if selected by the patient-family unit.
(5) A staff member, as designated in the patient care plan, shall be responsible for the coordination, implementation, and ongoing review of each plan. The plan shall be recorded in ink and shall be maintained as part of the patient-family unit record.
(6) The patient care plan shall give direction to the care given in meeting the physiological, psychological, sociological, and spiritual needs of the patient-family unit. The plan shall specifically address maintenance of patient independence and pain control.
(7) Resource materials relating to the administration and untoward effects of medications and treatments used in pain and symptom control shall be readily available to hospice and hospice residence personnel.
History: 1984 MR 10, Eff. Oct. 31, 1984; 2003 MR 7, Eff. Apr. 9, 2003.

R 325.13305 Bereavement and spiritual services.
Rule 305. (1) The hospice and its hospice residence, if applicable, shall provide, either directly or by arrangement, bereavement and spiritual services to the patient and family before and following the patient's death.
(2) Bereavement and spiritual services shall be available, if needed, 7 days a week and shall be available to the family for not less than 13 months following the death of the patient.
(3) Bereavement and spiritual services shall provide support to enable an individual to adjust to experiences associated with death.
(4) A spiritual advisor, if selected by the patient-family unit, shall participate as a member of the interdisciplinary care team.
(5) Bereavement and spiritual services shall be delivered consistent with the patient care plan.
History: 1984 MR 10, Eff. Oct. 31, 1984; 2003 MR 7, Eff. Apr. 9, 2003.

R 325.13306 Volunteer services.
Rule 306. (1) The hospice and its hospice residence, if applicable, may utilize lay or professional volunteer services to

promote the availability of care, meet the broadest range of patient-family unit needs, and effect financial economy in the operation of the hospice and its hospice residence, if applicable.
(2) A volunteer services director shall develop and implement a program which meets the operational needs of the program, coordinates orientation and education of volunteers, defines the role and responsibilities of volunteers, recruits volunteers, and coordinates the utilization of volunteers with other program directors.
(3) The volunteer services director shall be a member of the interdisciplinary team.
(4) Volunteer service staff shall be aware of a patient's condition and treatment as indicated on the written plan of care.
(5) Services provided by volunteers shall be in accord with the written plan of care.
History: 1984 MR 10, Eff. Oct. 31, 1984; 2003 MR 7, Eff. Apr. 9, 2003.

R 325.13307 Social work services.
Rule 307. (1) The hospice and its hospice residence, if applicable, shall provide, either directly or by arrangement, social work services to the patient and family before and following the patient's death.
(2) Social work services shall be available, if needed, 7 days a week.
(3) Social work services shall provide support to enable an individual to adjust to experiences associated with death.
(4) Social work services shall be delivered consistent with the patient care plan.
History: 1984 MR 10, Eff. Oct. 31, 1984; 2003 MR 7, Eff. Apr. 9, 2003.

PART 4. HEARING PROCEDURE

R 325.13401 Rescinded.
History: 1984 MR 10, Eff. Oct. 31, 1984; rescinded 2003 MR 7, Eff. Apr. 9, 2003.

R 325.13402 Rescinded
History: 1984 MR 10, Eff. Oct. 31, 1984; rescinded 2003 MR 7, Eff. Apr. 9, 2003.

R 325.13403 Rescinded.
History: 1984 MR 10, Eff. Oct. 31, 1984; rescinded 2003 MR 7, Eff. Apr. 9, 2003.

R 325.13404 Rescinded.
History: 1984 MR 10, Eff. Oct. 31, 1984; rescinded 2003 MR 7, Eff. Apr. 9, 2003.

R 325.13405 Rescinded.
History: 1984 MR 10, Eff. Oct. 31, 1984; rescinded 2003 MR 7, Eff. Apr. 9, 2003.

R 325.13406 Rescinded.
History: 1984 MR 10, Eff. Oct. 31, 1984; rescinded 2003 MR 7, Eff. Apr. 9, 2003.

R 325.13407 Rescinded.
History: 1984 MR 10, Eff. Oct. 31, 1984; rescinded 2003 MR 7, Eff. Apr. 9, 2003.

R 325.13408 Rescinded.
History: 1984 MR 10, Eff. Oct. 31, 1984; rescinded 2003 MR 7, Eff. Apr. 9, 2003.

R 325.13409 Rescinded.
History: 1984 MR 10, Eff. Oct. 31, 1984; rescinded 2003 MR 7, Eff. Apr. 9, 2003.

R 325.13410 Rescinded.
History: 1984 MR 10, Eff. Oct. 31, 1984; rescinded 2003 MR 7, Eff. Apr. 9, 2003.

R 325.13411 Rescinded.
History: 1984 MR 10, Eff. Oct. 31, 1984; rescinded 2003 MR 7, Eff. Apr. 9, 2003.

R 325.13412 Rescinded.
History: 1984 MR 10, Eff. Oct. 31, 1984; rescinded 2003 MR 7, Eff. Apr. 9, 2003.

R 325.13413 Rescinded.
History: 1984 MR 10, Eff. Oct. 31, 1984; rescinded 2003 MR 7, Eff. Apr. 9, 2003.

R 325.13414 Rescinded.
History: 1984 MR 10, Eff. Oct. 31, 1984; rescinded 2003 MR 7, Eff. Apr. 9, 2003.

R 325.13415 Rescinded.
History: 1984 MR 10, Eff. Oct. 31, 1984; rescinded 2003 MR 7, Eff. Apr. 9, 2003.

R 325.13416 Rescinded.
History: 1984 MR 10, Eff. Oct. 31, 1984; rescinded 2003 MR 7, Eff. Apr. 9, 2003.

R 325.13417 Rescinded.
History: 1984 MR 10, Eff. Oct. 31, 1984; rescinded 2003 MR 7, Eff. Apr. 9, 2003.

R 325.13418 Rescinded.
History: 1984 MR 10, Eff. Oct. 31, 1984; rescinded 2003 MR 7, Eff. Apr. 9, 2003.

PART 5. HOSPICE RESIDENCES PROVIDING CARE ONLY AT THE HOME CARE LEVEL

R 325.13501 Applicability.
Rule 501. (1) Unless otherwise specified in a rule, this part shall apply only to hospice residences that provide care only at the home care level of care.
(2) Articles 1 and 17 and part 214 of 1978 PA 368, MCL 333.1101 et seq., 333.20101 et seq., and 333.21401 et seq. contain definitions and additional licensure requirements for both hospice residences that provide care only at the home care level of care and hospice residences which provide inpatient care.
History: 2003 MR 7, Eff. Apr. 9, 2003.

R 325.13503 Submission of plans.
Rule 503. (1) Complete plans, specifications, and an operational narrative for new buildings, additions, major building changes, and conversion of existing facilities to use as a hospice residence**,** including a hospice residence providing inpatient care**,** shall be submitted to the bureau of health systems of the department for review to assure compliance with the law and these rules.
(2) Plans and specifications meeting the requirements of the law and these rules shall be approved by the department.
(3) Construction of new buildings, additions, major building changes, and conversions of existing facilities to use as a hospice residence shall not begin until the plans and specifications have been approved by the department and a construction permit has been issued for the construction to begin.
(4) The plan review fee shall be calculated at 0.5% of the first $1,000,000 and 0.85% of the amount over $1,000,000. The maximum plan review fee shall be $30,000.
History: 2003 MR 7, Eff. Apr. 9, 2003.

R 325.13505 Exteriors.
Rule 505. (1) The premises of a home care hospice residence shall be maintained in a safe and sanitary condition and in a manner consistent with the public health and welfare.
(2) Sufficient light for an exterior ramp, step, and porch shall be provided for the safety of persons using the facilities.
(3) An exterior step or ramp shall have a handrail on both sides. A porch shall have a railing to open sides.
History: 2003 MR 7, Eff. Apr. 9, 2003.

R 325.13507 Interiors.
Rule 507. (1) A home care hospice residence building shall be of safe construction and shall be free from hazards to hospice residents, personnel, and visitors.
(2) A stairway or ramp shall have a handrail on both sides.
(3) A room shall be provided with a type and amount of ventilation which will control odors and contribute to the comfort of occupants as follows:
(a) Systems shall be capable of maintaining a temperature in the range of 71 to 81 degrees Fahrenheit in patient and public areas.

(b) Supply air systems shall be equipped with air filters rated at a minimum efficiency of 25% per ASHRAE standard 52.1992. Printed copies of ASHRAE standard 52.1--1992 are available a cost of $15.00/member and $19.00/non-member from the American Society of Heating, Refrigeration, and Air-conditioning Engineers, Inc. (ASHRAE), 1791 Tullie Circle, NE, Atlanta, GA and WWW.ASHRAE.ORG. It is also available for review at the Bureau of Health Systems, Michigan Department of Consumer & Industry Services, 525 W. Ottawa, G. Mennen Williams Building, 5th floor, Lansing, MI 48933.
(c) Net airflow shall be from clean to less clean.
(d) Air shall not be returned from toilet/bathing rooms, janitor's closets, soiled holding/utility rooms, and isolation rooms.
(e) Continuous exhaust ventilation shall be provided for janitor closets, soiled utility rooms, isolation rooms, and toilet rooms that serve more than 1 patient**.**
(4) A floor, wall, or ceiling shall be covered and finished in a manner that will permit maintenance of a sanitary environment.
(5) All of the following areas of the hospice residence shall be provided with lighting as follows:
(a) General room illumination-10 footcandles measured at 30 inches above the floor.
(b) Reading locations (head of bed)-30 footcandles.
(c) Charting/medical area-50 footcandles.
(d) Handwash sinks and bathing areas-30 footcandles.
(e) Food preparation areas (task level)-30 footcandles.
(f) Storage rooms-20 footcandles.
(g) Corridors-20 footcandles.
(h) Laundry (general)-30 footcandles.
(i) Examination/treatment (may be portable)-75 footcandles.
(j) Night lighting in toilet rooms and bedrooms, sufficient to illuminate a footpath from the bed to the toilet room.
(k) Light fixtures shall be equipped with lenses or shields for protection of the lamps or with lamps that will not shatter.
(6) A room used for living or sleeping purposes shall have a minimum total window glass area on the outside walls equal to 10**%** of the required floor area and a clear unobstructed window view for a minimum distance of 20 feet.
(7) A minimum of 30 square feet of floor space per hospice bed shall be provided for dayroom, dining, and activity space.
(8) A basement or cellar shall not be used for sleeping or living quarters.
(9) A battery or secondary power source shall be provided for all critical or life support equipment, including oxygen and suction equipment, and there shall be emergency lighting sufficient to light corridors and exits.
(10) A functionally separate living, sleeping, dining, lavatory, water closet, and bathing facility shall be provided for personnel and members of their families who live on the premises.
(11) A doorway, passageway, corridor, hallway, or stairwell shall be kept free from obstructions at all times.
(12) An elevator shall be provided if hospice beds are located on more than 1 floor level. An elevator shall have a minimum cab size of 5 feet by 7 feet 6 inches.
(13) Dedicated space shall be provided for patient/family visitation and bereavement. The space may be omitted where all private bedrooms are provided.
(14) The facility shall provide for family overnight stay.
History: 2003 MR 7, Eff. Apr. 9, 2003.

R 325.13509 Home care hospice residence rooms.
Rule 509. (1) A bedroom shall have the floor surface at or above grade level along exterior walls with windows.
(2) A single bedroom shall provide not less than 100 square feet of usable floor space.
(3) A multi-bed room shall provide not less than 80 square feet of usable floor space per bed.
(4) Usable floor space shall not include a toilet room, closet, or vestibule.
(5) A bedroom shall be provided with a lavatory and toilet room opening into the room.
(6) A wardrobe or closet shall be provided for the storage of personal clothing.
(7) A multiple bedroom shall be designed to have a 3-foot clearance at each side and foot of the bed.
(8) A water closet or bathing facility shall have substantially secured grab bars at least 1 foot long.
(9) A bedroom shall permit the functional placement of furniture and equipment essential to the residents' comfort and safety.
(10) A bedroom shall have not less than 2 duplex receptacles, at least 1 of which shall be near the head of each bed.
(11) A nurse call system shall be provided at each home care hospice resident bed, water closet, and bathing fixture. The nurse call shall register at a staff location. An alternate calling/alert system may be approved by the department. A hand bell or other call system is acceptable in a hospice residence that has 8 or fewer beds if all beds are located within direct observation of the staff work station and if the call is clearly audible and identifies the patient location.
(12) The need for and number of airborne infection isolation rooms in a home care hospice residence shall be determined by an infection control risk assessment. Where provided, an isolation room shall be a single bedroom that has an attached

lavatory, water closet, and bathing facility reserved for the use of the occupant of the isolation room only. The isolation room shall have an area for staff hand washing and gowning and for storage of clean and soiled materials located directly outside or immediately inside the entry door to the room.
(13) A minimum of 10% of the bedrooms shall be accessible and meet the requirements of the Michigan barrier free design criteria.
(14) A hospice patient room shall have not more than 4 beds.
(15) In multiple-bedrooms, visual privacy from casual observation by other residents and visitors shall be provided for each resident. The design for privacy shall not restrict resident access to the entrance, lavatory, toilet room, or wardrobe.
History: 2003 MR 7, Eff. Apr. 9, 2003.

R 325.13511 Hospice care unit.
Rule 511. (1) A hospice care unit in a home care hospice residence shall have all of the following:
(a) A dedicated area for medication storage and preparation and charting. The space shall be well lighted, equipped with a lavatory for hand washing, a refrigerator, and locked storage for medication.
(b) A room for the storage of clean linen, clean equipment, and clean supplies.
(c) A workroom for holding trash and soiled linens that is also designed for reprocessing of equipment. The room shall be separate from clean storage facilities.
(d) A janitor's closet shall be provided. For home care hospice residences of 8 or fewer beds, the janitor's closet may be combined with a properly sized soiled workroom.
(2) A bathing facility shall be provided for every 20 home care hospice residence beds.
(3) At least 1 assisted (barrier free) bathing fixture shall be provided.
(4) A home care hospice toilet room or bathroom shall not be used for storage or housekeeping functions.
History: 2003 MR 7, Eff. Apr. 9, 2003.

R 325.13513 Public and personnel area.
Rule 513. (1) A public toilet room that has a lavatory and water closet shall be provided.
(2) A dedicated staff break/locker space shall be provided. A lavatory and water closet shall be located convenient to the break/locker space. For a home care hospice residence that has 8 or fewer beds, the staff facilities and public areas may be shared.
History: 2003 MR 7, Eff. Apr. 9, 2003.

R 325.13515 Laundry and linens.
Rule 515. (1) The collection, storage, and transfer of clean and soiled linen shall be accomplished in a manner that will minimize the danger of disease transmission.
(2) A home care hospice residence that uses an outside laundry service shall have a soiled linen holding room and a separate clean linen/supplies storage room. When justified by the operational narrative, a properly sized soiled workroom may function as the soiled linen holding room.
(3) A home care hospice residence that processes its own linen shall provide a well ventilated laundry room of sufficient size to allow functional separation of soiled linen holding, laundry processing, and clean linen folding. The laundry shall be ventilated to provide directional airflow from clean to soiled areas. A lavatory for hand washing shall be provided in the laundry processing area. A separate clean linen storage room/area shall be provided. When justified by the operational narrative, a properly sized and located soiled workroom may serve as a soiled linen holding room. Laundry equipment shall be rated commercial or heavy duty**.**
History: 2003 MR 7, Eff. Apr. 9, 2003.

R 325.13517 Water systems.
Rule 517. (1) A home care hospice residence located in a area served by a public water system shall connect to and use that system.
(2) If a public water system is not available, then the location and construction of a well and the operation of the water system shall comply with 1976 PA 399, MCL 325.1001 seq.
(3) Tempered water shall be regulated in the range between 105 and 120 degrees Fahrenheit.
History: 2003 MR 7, Eff. Apr. 9, 2003.

R 325.13519 Liquid wastes.
Rule 519. (1) Liquid wastes shall be discharged into a public sanitary sewage system when a system is available.
(2) If a public sanitary sewage system is not available and a private liquid wastewater disposal system is used, the type, size,

construction, and alteration of the system shall comply with all applicable laws. A subsurface disposal system shall not be approved for a home care hospice residence that has more than 8 beds.
(3) The wastewater disposal system shall be maintained in a sanitary manner.
History: 2003 MR 7, Eff. Apr. 9, 2003.

R 325.13521 Solid wastes.
Rule 521. (1) The collection, storage, and disposal of solid wastes, including garbage, refuse, and dressings, shall be accomplished in a manner which will minimize the danger of disease transmission and avoid creating a public nuisance or a breeding place for insects and rodents.
(2) Suitable containers for garbage, refuse, medical waste, and other solid wastes shall be provided, emptied at frequent intervals, and maintained in a clean and sanitary condition.
History: 2003 MR 7, Eff. Apr. 9, 2003.

R 325.13523 Heating.
Rule 523. A room in the home care hospice residence used by residents shall be maintained at a regular daytime temperature of not less 72 degrees Fahrenheit. Bedroom temperatures may be less than 72 degrees Fahrenheit if justified by the hospice patient's medical condition or preference.
History: 2003 MR 7, Eff. Apr. 9, 2003.

R 325.13525 Kitchen and dietary area.
Rule 525. (1) A home care hospice residence shall have a kitchen and dietary area of adequate size to meet food service needs of the residents. It shall be arranged and equipped for the refrigeration, storage, preparation, and serving of food as well as for dish and utensil cleaning and refuse storage and removal. Where food service is provided from an outside service, the food service shall be licensed by the Michigan department of agriculture**.**
(2) The kitchen and dietary area shall be equipped with a lavatory for hand washing. The lavatory shall have a gooseneck inlet and wristblade or other hands-free controls.
(3) Food stored, prepared, and served in the hospice residence shall meet the requirements of 2000 PA 92, MCL 289.1101 et seq.
(4) Multi-use utensils used in food storage, preparation, transport, or serving shall be designed, cleaned, and sanitized in accordance with the requirements of 2000 PA 92, MCL 289.1101 et seq.
(5) Food equipment and work surfaces shall meet the requirements of 2000 PA 92, MCL 289.1101 et seq. Heavy-duty residential food equipment, including an exhaust hood and work surfaces may be provided in a hospice residence that has 8 beds or less.
History: 2003 MR 7, Eff. Apr. 9, 2003.

R 325.13527 Insect and vermin control.
Rule 527. (1) A home care hospice residence shall be kept free from insects and vermin.
(2) Breeding places for insects and vermin shall be eliminated.
History: 2003 MR 7, Eff. Apr. 9, 2003.

R 325.13529 General maintenance.
Rule 529. (1) The building, equipment, and furniture shall be kept clean and in good repair.
(2) Hazardous and toxic materials shall be stored in a safe manner.
(3) A room shall be provided in the home care hospice residence or on the premises for equipment and furniture maintenance and repair and for the storage of maintenance equipment and supplies.
History: 2003 MR 7, Eff. Apr. 9, 2003.

R 325.13531 Fire safety and disaster planning.
Rule 531. (1) A home care hospice residence shall comply with all of the following provisions:
(a) Obtain fire safety approval pursuant to sections 20156 and 21413(3)(c) of 1978 PA 368, MCL 333.20156 and 333.21413(3)(c).
(b) Have a disaster management plan tailored to the facility and the types of residents it serves, which shall be periodically practiced on all shifts.
(c) Have policies and procedures to meet potential emergencies and disasters, which include, at a minimum fire, tornado, power outage, and severe weather.
(2) A home care hospice residence shall have policies and procedures which address all of the following:

(a) Prompt identification and transfer of patients and records to the appropriate facility.
(b) Arrangements with community resources.
(c) Emergency management and family call.
History: 2003 MR 7, Eff. Apr. 9, 2003.

R 325.13533 Pharmaceutical services.
Rule 533. Pharmaceutical services in a home care hospice residence
shall comply with the requirements of 42 CFR 418.100(k). Printed copies of 42 CFR, part 418.00, published in December 2001 in the federal register, are available for inspection and distribution to the public from the United States Government Printing Office, Superintendent of Documents, PO Box 371954, Pittsburgh, PA 15250-7924, at a cost of $59.00 at the time of the adoption of this rule. The full text of code of federal regulations are also available in electronic format at www.access.gpo.gov/nara and is available for review at the Bureau of Health Systems, Michigan Department of Consumer & Industry Services, G. Mennen Williams Building, 525 W. Ottawa, Lansing, MI 48933.
History: 2003 MR 7, Eff. Apr. 9, 2003.

R 325.13535 Infection control.
Rule 535. (1) The plan for infection control, required by section 21413(3)(b) of the code, shall be approved by the residence administration and shall contain a plan and facility policies which address, at least all of the following:
(a) Provisions for isolating each patient who has an infectious disease.
(b) Provisions for isolation rooms.
(c) Universal precautions.
(d) Transfer of patients to other facilities if required.
(e) Non-admission of patients who have airborne infectious disease.
(2) A residence shall require a new resident to have had a chest x-ray within 90 days before admission.
(3) Employee TB testing shall include the 2-step mantoux test and shall be annual or as specified by the local health department.
History: 2003 MR 7, Eff. Apr. 9, 2003.

R 325.13537 Staffing requirements.
Rule 537. (1) A home care hospice residence shall comply with all of the following staffing requirements:
(a) Provide 24-hour nursing services for each patient in accordance with the patient's hospice care plan as required by 42 CFR part 418. Printed copies of 42 CFR, part 418.00, published in December, 2001 in the federal register, are available for inspection and distribution to the public from the United States Government Printing Office, Superintendent of Documents, PO Box 371954, Pittsburgh, PA 15250-7924, at a cost of $59.00 at the time of the adoption of this rule. The full text of code of federal regulations are also available in electronic format at www.access.gpo.gov/nara and is available for review at the Bureau of Health Systems, Michigan Department of consumer & Industry Services, G. Mennen Williams Building, 525 W. Ottawa, Lansing, MI 48933.
(b) Provide nursing care and services by or under the supervision of a registered nurse.
(c) Direct and staff nursing services to assure that the nursing needs of patients are met.
(d) Specify patient care responsibilities of nursing and other hospice personnel.
(e) Provide services in accordance with recognized standards of practice.
(f) Provide a licensed nurse for each shift.
(2) A home care hospice residence shall maintain a nursing staff sufficient to provide at least 1 nurse to each 8 patients on the morning shift; 1 nurse to each 12 patients on the afternoon shift; and 1 nurse to each 15 patients on the nighttime shift. Additional nurses and other nursing personnel shall be added based upon patient or family needs.
History: 2003 MR 7, Eff. Apr. 9, 2003.

R 325.13539 Medical waste.
Rule 539. A home care hospice residence shall comply with the requirements of 1990 PA 13, MCL 330.1147 et seq.
History: 2003 MR 7, Eff. Apr. 9, 2003.

R 325.13541 Dietary.
Rule 541. A home care hospice residence dietary service shall comply with the requirements of 42 CFR 418.100(j). Printed copies of 42 CFR, part 418.00, published in December 2001 in the federal register, are available for inspection and distribution to the public from the United States Government Printing Office, Superintendent of Documents, PO Box 371954, Pittsburgh, PA 15250-7924, at a cost of $59.00 at the time of the adoption of this rule. The full text of code of federal

regulations are also available in electronic format at www.access.gpo.gov/nara and is available for review at the Bureau of Health Systems, Michigan Department of Consumer & Industry Services, G. Mennen Williams Building, 525 W. Ottawa, Lansing, MI 48933.
History: 2003 MR 7, Eff. Apr. 9, 2003.

R 325.13543 Additional requirements.
Rule 543. A hospice residence which provides both home care and an inpatient level of care shall comply with the requirements established for hospices providing an inpatient level of care.
History: 2003 MR 7, Eff. Apr. 9, 2003.

DEPARTMENT OF COMMUNITY HEALTH

OFFICE OF SUBSTANCE ABUSE SERVICES

SUBSTANCE ABUSE SERVICE PROGRAM

PART 1. GENERAL PROVISIONS

R 325.14101
Source: 1981 AACS.

R 325.14102
Source: 1981 AACS.

R 325.14103
Source: 1981 AACS.

R 325.14104
Source: 1981 AACS.

R 325.14105
Source: 1981 AACS.

R 325.14106
Source: 1981 AACS.

R 325.14107
Source: 1981 AACS.

R 325.14108
Source: 1981 AACS.

R 325.14109
Source: 1981 AACS.

R 325.14110
Source: 1981 AACS.

R 325.14111
Source: 1981 AACS.

R 325.14112
Source: 1981 AACS.

R 325.14113
Source: 1981 AACS.

R 325.14114
Source: 1981 AACS.

R 325.14115
Source: 1981 AACS.

R 325.14116
Source: 1988 AACS.

R 325.14117
Source: 1981 AACS.

R 325.14125
Source: 1981 AACS.

PART 2. LICENSURE OF SUBSTANCE ABUSE PROGRAMS

R 325.14201
Source: 1981 AACS.

R 325.14202
Source: 1981 AACS.

R 325.14203
Source: 1981 AACS.

R 325.14204
Source: 1981 AACS.

R 325.14205
Source: 1981 AACS.

R 325.14206
Source: 1981 AACS.

R 325.14207
Source: 1981 AACS.

R 325.14208
Source: 1981 AACS.

R 325.14209
Source: 1981 AACS.

R 325.14210
Source: 1981 AACS.

R 325.14211
Source: 1981 AACS.

R 325.14212
Source: 1981 AACS.

R 325.14213
Source: 1981 AACS.

R 325.14214
Source: 1981 AACS.

PART 3. RECIPIENT RIGHTS

R 325.14301
Source: 1981 AACS.

R 325.14302
Source: 1981 AACS.

R 325.14303
Source: 1981 AACS.

R 325.14304
Source: 1981 AACS.

R 325.14305
Source: 1981 AACS.

R 325.14306
Source: 1981 AACS.

PART 4. METHADONE TREATMENT AND OTHER CHEMOTHERAPY

R 325.14401
Source: 1981 AACS.

R 325.14402
Source: 1981 AACS.

R 325.14403
Source: 1981 AACS.

R 325.14404
Source: 1981 AACS.

R 325.14405
Source: 1981 AACS.

R 325.14406
Source: 1981 AACS.

R 325.14407
Source: 1981 AACS.

R 325.14408
Source: 1981 AACS.

R 325.14409
Source: 1981 AACS.

R 325.14410
Source: 1981 AACS.

R 325.14411
Source: 1981 AACS.

R 325.14412
Source: 1981 AACS.

R 325.14413
Source: 1981 AACS.

R 325.14414
Source: 1981 AACS.

R 325.14415
Source: 1981 AACS.

R 325.14416
Source: 1981 AACS.

R 325.14417
Source: 1981 AACS.

R 325.14418
Source: 1981 AACS.

R 325.14419
Source: 1981 AACS.

R 325.14420
Source: 1981 AACS.

R 325.14421
Source: 1981 AACS.

R 325.14422
Source: 1981 AACS.

R 325.14423
Source: 1981 AACS.

PART 5. PREVENTION

R 325.14501
Source: 1981 AACS.

R 325.14521
Source: 1981 AACS.

R 325.14522
Source: 1981 AACS.

R 325.14523
Source: 1981 AACS.

R 325.14524
Source: 1981 AACS.

R 325.14525
Source: 1981 AACS.

R 325.14526
Source: 1981 AACS.

R 325.14527
Source: 1981 AACS.

R 325.14528
Source: 1981 AACS.

R 325.14529
Source: 1981 AACS.

R 325.14530
Source: 1981 AACS.

PART 6. CASEFINDING

R 325.14601
Source: 1981 AACS.

R 325.14602
Source: 1981 AACS.

R 325.14603
Source: 1981 AACS.

R 325.14621
Source: 1981 AACS.

R 325.14622
Source: 1981 AACS.

R 325.14623
Source: 1981 AACS.

PART 7. OUTPATIENT PROGRAMS

R 325.14701
Source: 1981 AACS.

R 325.14702
Source: 1981 AACS.

R 325.14703
Source: 1981 AACS.

R 325.14704
Source: 1981 AACS.

R 325.14705
Source: 1981 AACS.

R 325.14706
Source: 1981 AACS.

R 325.14707
Source: 1981 AACS.

R 325.14708
Source: 1981 AACS.

R 325.14709
Source: 1981 AACS.

R 325.14710
Source: 1981 AACS.

R 325.14711
Source: 1981 AACS.

R 325.14712
Source: 1981 AACS.

PART 8. INPATIENT PROGRAMS

R 325.14801
Source: 1981 AACS.

R 325.14802
Source: 1981 AACS.

R 325.14803
Source: 1981 AACS.

R 325.14804
Source: 1981 AACS.

R 325.14805
Source: 1981 AACS.

R 325.14806
Source: 1981 AACS.

R 325.14807
Source: 1981 AACS.

PART 9. RESIDENTIAL PROGRAMS

R 325.14901
Source: 1981 AACS.

R 325.14902
Source: 1981 AACS.

R 325.14903
Source: 1981 AACS.

R 325.14904
Source: 1981 AACS.

R 325.14905
Source: 1981 AACS.

R 325.14906
Source: 1981 AACS.

R 325.14907
Source: 1981 AACS.

R 325.14908
Source: 1981 AACS.

R 325.14909
Source: 1981 AACS.

R 325.14910
Source: 1981 AACS.

R 325.14911
Source: 1981 AACS.

R 325.14921
Source: 1981 AACS.

R 325.14922
Source: 1981 AACS.

R 325.14923
Source: 1981 AACS.

R 325.14924
Source: 1981 AACS.

R 325.14925
Source: 1981 AACS.

R 325.14926
Source: 1981 AACS.

R 325.14927
Source: 1981 AACS.

R 325.14928
Source: 1981 AACS.

DEPARTMENT OF ENVIRONMENTAL QUALITY

DIVISION OF OCCUPATIONAL HEALTH

CLASS IV DRY CLEANING ESTABLISHMENTS

PART 1. GENERAL PROVISIONS

R 325.17101
Source: 1981 AACS.

R 325.17102
Source: 1981 AACS.

R 325.17103
Source: 1981 AACS.

R 325.17104
Source: 1981 AACS.

R 325.17105
Source: 1981 AACS.

R 325.17106
Source: 1981 AACS.

R 325.17107
Source: 1981 AACS.

R 325.17108
Source: 1981 AACS.

R 325.17109
Source: 1981 AACS.

PART 2. DRAWINGS

R 325.17201
Source: 1981 AACS.

R 325.17202
Source: 1987 AACS.

R 325.17203
Source: 1981 AACS.

R 325.17204
Source: 1981 AACS.

R 325.17205
Source: 1981 AACS.

R 325.17206
Source: 1981 AACS.

R 325.17207
Source: 1981 AACS.

R 325.17208
Source: 1981 AACS.

R 325.17209
Source: 1981 AACS.

R 325.17210
Source: 1981 AACS.

PART 3. LICENSURE

R 325.17301
Source: 1987 AACS.

R 325.17302
Source: 1987 AACS.

R 325.17303
Source: 1981 AACS.

R 325.17304
Source: 1981 AACS.

R 325.17305
Source: 1981 AACS.

R 325.17306
Source: 1981 AACS.

R 325.17307
Source: 1981 AACS.

R 325.17308
Source: 1981 AACS.

R 325.17309
Source: 1981 AACS.

PART 4. DRY CLEANING MACHINE REQUIREMENTS

R 325.17401
Source: 1981 AACS.

R 325.17402
Source: 1981 AACS.

R 325.17403
Source: 1981 AACS.

R 325.17404
Source: 1981 AACS.

R 325.17405
Source: 1981 AACS.

R 325.17406
Source: 1981 AACS.

R 325.17407
Source: 1981 AACS.

R 325.17408
Source: 1981 AACS.

R 325.17409
Source: 1981 AACS.

PART 5. BUILDING REQUIREMENTS

R 325.17501
Source: 1981 AACS.

R 325.17502
Source: 1981 AACS.

R 325.17503
Source: 1981 AACS.

R 325.17504
Source: 1981 AACS.

R 325.17505
Source: 1981 AACS.

R 325.17506
Source: 1981 AACS.

R 325.17507
Source: 1981 AACS.

R 325.17508
Source: 1981 AACS.

R 325.17509
Source: 1981 AACS.

R 325.17510
Source: 1981 AACS.

PART 7. INSTALLATION, OPERATION, AND VENTILATION

R 325.17701
Source: 1981 AACS.

R 325.17702
Source: 1981 AACS.

R 325.17703
Source: 1981 AACS.

R 325.17704
Source: 1981 AACS.

R 325.17705
Source: 1981 AACS.

R 325.17706
Source: 1981 AACS.

R 325.17707
Source: 1981 AACS.

R 325.17708
Source: 1981 AACS.

R 325.17709
Source: 1981 AACS.

R 325.17710
Source: 1981 AACS.

R 325.17711
Source: 1981 AACS.

R 325.17712
Source: 1981 AACS.

PART 9. INSPECTIONS OF DRY CLEANING ESTABLISHMENTS

R 325.17901
Source: 1981 AACS.

R 325.17902
Source: 1981 AACS.

R 325.17903
Source: 1981 AACS.

R 325.17904
Source: 1981 AACS.

R 325.17905
Source: 1981 AACS.

R 325.17906
Source: 1981 AACS.

PART 10. CONTESTED CASES

R 325.18001
Source: 1981 AACS.

R 325.18002
Source: 1981 AACS.

R 325.18003
Source: 1981 AACS.

R 325.18004
Source: 1981 AACS.

R 325.18005
Source: 1981 AACS.

R 325.18006
Source: 1981 AACS.

PART 11. TYPICAL DESIGN PRINTS AND DIAGRAMS

R 325.18101
Source: 1981 AACS.

R 325.18102
Source: 1981 AACS.

R 325.18103
Source: 1981 AACS.

R 325.18104
Source: 1981 AACS.

DEPARTMENT OF CONSUMER AND INDUSTRY SERVICES

OCCUPATIONAL HEALTH STANDARDS COMMISSION

PROCESS SAFETY MANAGEMENT OF HIGHLY HAZARDOUS CHEMICALS

R 325.18301
Source: 1998-2000 AACS.

R 325.18302
Source: 1998-2000 AACS.

HEALTH FACILITIES SERVICES ADMINISTRATION

NURSING HOMES AND NURSING CARE FACILITIES

PART 1. GENERAL PROVISIONS

R 325.20101
Source: 1981 AACS.

R 325.20102
Source: 1981 AACS.

R 325.20103
Source: 1981 AACS.

R 325.20104
Source: 1983 AACS.

R 325.20106
Source: 1981 AACS.

R 325.20107
Source: 1981 AACS.

R 325.20108
Source: 1981 AACS.

R 325.20109
Source: 1981 AACS.

R 325.20110
Source: 1981 AACS.

R 325.20111
Source: 1981 AACS.

R 325.20112
Source: 1981 AACS.

R 325.20113
Source: 1983 AACS.

R 325.20114
Source: 1981 AACS.

R 325.20115
Source: 1981 AACS.

R 325.20116
Source: 1981 AACS.

R 325.20117
Source: 1983 AACS.

R 325.20118

Source: 1981 AACS.

PART 2. LICENSURE

R 325.20201
Source: 1981 AACS.

R 325.20202
Source: 1981 AACS.

R 325.20203
Source: 1981 AACS.

R 325.20204
Source: 1981 AACS.

R 325.20205
Source: 1981 AACS.

R 325.20206
Source: 1983 AACS.

R 325.20207
Source: 1981 AACS.

R 325.20208
Source: 1981 AACS.

R 325.20209
Source: 1981 AACS.

R 325.20210
Source: 1981 AACS.

R 325.20211
Source: 1981 AACS.

R 325.20212
Source: 1981 AACS.

R 325.20213
Source: 1981 AACS.

R 325.20214
Source: 1981 AACS.

R 325.20215
Source: 1981 AACS.

PART 3. ACCESS TO NURSING HOMES AND PATIENTS

R 325.20301
Source: 1981 AACS.

R 325.20302
Source: 1983 AACS.

R 325.20303
Source: 1983 AACS.

R 325.20304
Source: 1983 AACS.

PART 4. ADMINISTRATIVE MANAGEMENT OF HOMES

R 325.20401
Source: 1981 AACS.

R 325.20402
Source: 1981 AACS.

R 325.20403
Source: 1981 AACS.

R 325.20404
Source: 1983 AACS.

R 325.20405
Source: 1981 AACS.

R 325.20406
Source: 1983 AACS.

R 325.20407
Source: 1981 AACS.

PART 5. PATIENT CARE

R 325.20501
Source: 1981 AACS.

R 325.20502
Source: 1983 AACS.

R 325.20503
Source: 1981 AACS.

R 325.20504
Source: 1981 AACS.

R 325.20505
Source: 1981 AACS.

R 325.20506
Source: 1981 AACS.

R 325.20507
Source: 1981 AACS.

R 325.20508
Source: 1981 AACS.

R 325.20509
Source: 1981 AACS.

PART 6. PHYSICIAN SERVICES

R 325.20601

Source: 1981 AACS.

R 325.20602
Source: 1981 AACS.

R 325.20603
Source: 1983 AACS.

R 325.20604
Source: 1981 AACS.

R 325.20605
Source: 1983 AACS.

R 325.20606
Source: 1981 AACS.

PART 7. NURSING SERVICES

R 325.20701
Source: 1983 AACS.

R 325.20702
Source: 1983 AACS.

R 325.20703
Source: 1986 AACS.

R 325.20704
Source: 1986 AACS.

R 325.20705
Source: 1981 AACS.

R 325.20706
Source: 1981 AACS.

R 325.20707
Source: 1983 AACS.

R 325.20708
Source: 1981 AACS.

R 325.20709
Source: 1984 AACS.

R 325.20710
Source: 1981 AACS.

R 325.20711
Source: 1983 AACS.

R 325.20712
Source: 1983 AACS.

R 325.20713
Source: 1981 AACS.

R 325.20714

Source: 1983 AACS.

PART 8. DIETARY SERVICES

R 325.20801
Source: 1983 AACS.

R 325.20802
Source: 1981 AACS.

R 325.20803
Source: 1981 AACS.

R 325.20804
Source: 1983 AACS.

R 325.20805
Source: 1981 AACS.

R 325.20806
Source: 1983 AACS.

PART 9. PHARMACEUTICAL SERVICES

R 325.20901
Source: 1983 AACS.

R 325.20902
Source: 1981 AACS.

R 325.20903
Source: 1981 AACS.

R 325.20904
Source: 1981 AACS.

R 325.20905
Source: 1981 AACS.

R 325.20906
Source: 1981 AACS.

PART 10. OTHER SERVICES

R 325.21001
Source: 1981 AACS.

R 325.21002
Source: 1981 AACS.

R 325.21003
Source: 1986 AACS.

PART 11. RECORDS

R 325.21101
Source: 1983 AACS.

R 325.21102
Source: 1983 AACS.

R 325.21103
Source: 1981 AACS.

R 325.21104
Source: 1981 AACS.

R 325.21105
Source: 1983 AACS.

PART 12. MEDICAL AUDIT, UTILIZATION REVIEW, AND QUALITY CONTROL

R 325.21201
Source: 1981 AACS.

R 325.21203
Source: 1981 AACS.

R 325.21204
Source: 1981 AACS.

PART 13. BUILDINGS AND GROUNDS

R 325.21301
Source: 1981 AACS.

R 325.21302
Source: 1981 AACS.

R 325.21303
Source: 1983 AACS.

R 325.21304
Source: 1981 AACS.

R 325.21305
Source: 1983 AACS.

R 325.21306
Source: 1983 AACS.

R 325.21307
Source: 1983 AACS.

R 325.21308
Source: 1981 AACS.

R 325.21309
Source: 1981 AACS.

R 325.21310
Source: 1981 AACS.

R 325.21311
Source: 1983 AACS.

R 325.21312
Source: 1981 AACS.

R 325.21313
Source: 1981 AACS.

R 325.21314
Source: 1981 AACS.

R 325.21315
Source: 1981 AACS.

R 325.21316
Source: 1983 AACS.

R 325.21317
Source: 1983 AACS.

R 325.21318
Source: 1981 AACS.

R 325.21319
Source: 1981 AACS.

R 325.21320
Source: 1981 AACS.

R 325.21321
Source: 1981 AACS.

R 325.21322
Source: 1981 AACS.

R 325.21323
Source: 1983 AACS.

R 325.21324
Source: 1981 AACS.

R 325.21325
Source: 1981 AACS.

R 325.21326
Source: 1983 AACS.

R 325.21327
Source: 1983 AACS.

R 325.21328
Source: 1981 AACS.

PART 14. CHILD CARE HOMES AND CHILD CARE UNITS

R 325.21401
Source: 1981 AACS.

R 325.21402
Source: 1981 AACS.

R 325.21403
Source: 1981 AACS.

R 325.21404
Source: 1981 AACS.

R 325.21405
Source: 1981 AACS.

R 325.21406
Source: 1981 AACS.

R 325.21407
Source: 1981 AACS.

R 325.21408
Source: 1981 AACS.

R 325.21409
Source: 1981 AACS.

R 325.21410
Source: 1981 AACS.

R 325.21411
Source: 1981 AACS.

PART 15. CERTIFICATION

R 325.21501
Source: 1981 AACS.

R 325.21502
Source: 1981 AACS.

R 325.21503
Source: 1981 AACS.

R 325.21504
Source: 1981 AACS.

R 325.21505
Source: 1981 AACS.

R 325.21506
Source: 1981 AACS.

R 325.21507
Source: 1981 AACS.

R 325.21508
Source: 1981 AACS.

R 325.21509
Source: 1981 AACS.

R 325.21510
Source: 1981 AACS.

R 325.21511
Source: 1981 AACS.

R 325.21512
Source: 1981 AACS.

R 325.21513
Source: 1981 AACS.

R 325.21514
Source: 1981 AACS.

R 325.21515
Source: 1981 AACS.

PART 16. NURSING FACILITIES FOR CARE OF MENTALLY ILL PATIENTS

R 325.21601
Source: 1981 AACS.

R 325.21602
Source: 1981 AACS.

R 325.21603
Source: 1981 AACS.

R 325.21604
Source: 1981 AACS.

R 325.21605
Source: 1981 AACS.

PART 17. NURSING FACILITIES FOR CARE OF MENTALLY RETARDED PATIENTS

R 325.21701
Source: 1981 AACS.

R 325.21702
Source: 1981 AACS.

R 325.21703
Source: 1981 AACS.

R 325.21704
Source: 1981 AACS.

R 325.21705
Source: 1981 AACS.

PART 18. NURSING FACILITIES FOR CARE OF TUBERCULOSIS PATIENTS

R 325.21801
Source: 1981 AACS.

R 325.21802
Source: 1981 AACS.

R 325.21803

Source: 1981 AACS.

R 325.21804
Source: 1981 AACS.

R 325.21805
Source: 1981 AACS.

R 325.21806
Source: 1981 AACS.

R 325.21807
Source: 1981 AACS.

PART 19. HEARING PROCEDURE

R 325.21901
Source: 1981 AACS.

R 325.21902
Source: 1981 AACS.

R 325.21903
Source: 1981 AACS.

R 325.21904
Source: 1981 AACS.

R 325.21905
Source: 1981 AACS.

R 325.21906
Source: 1981 AACS.

R 325.21907
Source: 1981 AACS.

R 325.21908
Source: 1981 AACS.

R 325.21909
Source: 1981 AACS.

R 325.21910
Source: 1981 AACS.

R 325.21911
Source: 1981 AACS.

R 325.21912
Source: 1981 AACS.

R 325.21913
Source: 1981 AACS.

R 325.21914
Source: 1981 AACS.

R 325.21915

Source: 1981 AACS.

R 325.21916
Source: 1981 AACS.

R 325.21917
Source: 1981 AACS.

R 325.21918
Source: 1981 AACS.

R 325.21919
Source: 1981 AACS.

R 325.21920
Source: 1981 AACS.

R 325.21921
Source: 1981 AACS.

R 325.21922
Source: 1981 AACS.

PART 20. EDUCATION AND TRAINING OF UNLICENSED NURSING PERSONNEL

R 325.22001
Source: 1983 AACS.

R 325.22002
Source: 1983 AACS.

R 325.22003
Source: 1983 AACS.

R 325.22003a
Source: 1984 AACS.

R 325.22004
Source: 1983 AACS.

EMERGENCY MEDICAL SERVICES

PART 1. GENERAL PROVISIONS

R 325.23101
Source: 1984 AACS.

R 325.23102
Source: 1984 AACS.

R 325.23103
Source: 1984 AACS.

R 325.23104
Source: 1984 AACS.

R 325.23105
Source: 1984 AACS.

R 325.23106
Source: 1984 AACS.

R 325.23107
Source: 1984 AACS.

PART 2. EMERGENCY MEDICAL SERVICES SYSTEM

R 325.23201
Source: 1984 AACS.

R 325.23202
Source: 1984 AACS.

R 325.23203
Source: 1984 AACS.

PART 3. AMBULANCE PERSONNEL, AMBULANCE ATTENDANTS

R 325.23301
Source: 1984 AACS.

R 325.23302
Source: 1984 AACS.

R 325.23303
Source: 1984 AACS.

R 325.23304
Source: 1984 AACS.

PART 4. ADVANCED EMERGENCY MEDICAL TECHNICIANS, EMERGENCY MEDICAL TECHNICIAN SPECIALISTS, EMERGENCY MEDICAL TECHNICIANS

R 325.23401
Source: 1984 AACS.

R 325.23402
Source: 1984 AACS.

R 325.23403
Source: 1984 AACS.

R 325.23404
Source: 1984 AACS.

R 325.23405
Source: 1984 AACS.

R 325.23406
Source: 1984 AACS.

R 325.23407
Source: 1984 AACS.

PART 5. INSTRUCTOR-COORDINATORS

R 325.23501

Source: 1984 AACS.

R 325.23502
Source: 1984 AACS.

R 325.23503
Source: 1984 AACS.

R 325.23504
Source: 1984 AACS.

R 325.23505
Source: 1984 AACS.

R 325.23506
Source: 1984 AACS.

R 325.23507
Source: 1984 AACS.

PART 6. TRAINING PROGRAM REQUIREMENTS

R 325.23601
Source: 1984 AACS.

R 325.23602
Source: 1984 AACS.

R 325.23603
Source: 1984 AACS.

PART 7. MEDICAL CONTROL

R 325.23701
Source: 1984 AACS.

R 325.23702
Source: 1984 AACS.

R 325.23703
Source: 1984 AACS.

R 325.23704
Source: 1984 AACS.

R 325.23705
Source: 1984 AACS.

R 325.23706
Source: 1984 AACS.

R 325.23707
Source: 1984 AACS.

PART 8. ADVANCED AND LIMITED ADVANCED MOBILE EMERGENCY CARE SERVICES

R 325.23801
Source: 1984 AACS.

R 325.23802
Source: 1984 AACS.

R 325.23803
Source: 1984 AACS.

R 325.23804
Source: 1984 AACS.

R 325.23805
Source: 1984 AACS.

R 325.23806
Source: 1984 AACS.

R 325.23807
Source: 1984 AACS.

R 325.23808
Source: 1984 AACS.

PART 9. AMBULANCE OPERATIONS

R 325.23901
Source: 1984 AACS.

R 325.23902
Source: 1984 AACS.

R 325.23903
Source: 1984 AACS.

R 325.23904
Source: 1984 AACS.

R 325.23905
Source: 1984 AACS.

R 325.23906
Source: 1984 AACS.

PART 10. VEHICLE STANDARDS

R 325.24001
Source: 1984 AACS.

R 325.24002
Source: 1984 AACS.

R 325.24003
Source: 1984 AACS.

R 325.24004
Source: 1984 AACS.

R 325.24005
Source: 1984 AACS.

R 325.24006
Source: 1984 AACS.

R 325.24007
Source: 1984 AACS.

R 325.24008
Source: 1984 AACS.

R 325.24009
Source: 1984 AACS.

R 325.24010
Source: 1984 AACS.

R 325.24011
Source: 1984 AACS.

R 325.24012
Source: 1984 AACS.

R 325.24013
Source: 1984 AACS.

R 325.24014
Source: 1984 AACS.

R 325.24015
Source: 1984 AACS.

R 325.24016
Source: 1984 AACS.

R 325.24017
Source: 1984 AACS.

R 325.24018
Source: 1984 AACS.

R 325.24020
Source: 1984 AACS.

PART 11. HEARING PROCEDURES

R 325.24101
Source: 1984 AACS.

R 325.24102
Source: 1984 AACS.

R 325.24103
Source: 1984 AACS.

R 325.24104
Source: 1984 AACS.

R 325.24105
Source: 1984 AACS.

R 325.24106
Source: 1984 AACS.

R 325.24107
Source: 1984 AACS.

R 325.24108
Source: 1984 AACS.

R 325.24109
Source: 1984 AACS.

R 325.24110
Source: 1984 AACS.

R 325.24111
Source: 1984 AACS.

R 325.24112
Source: 1984 AACS.

R 325.24113
Source: 1984 AACS.

R 325.24114
Source: 1984 AACS.

R 325.24115
Source: 1984 AACS.

R 325.24116
Source: 1984 AACS.

R 325.24117
Source: 1984 AACS.

R 325.24118
Source: 1984 AACS.

DEPARTMENT OF AGRICULTURE

BUREAU OF ENVIRONMENTAL AND OCCUPATIONAL HEALTH

FOOD SERVICE SANITATION

PART 1. GENERAL PROVISIONS

R 325.25101
Source: 2001 AACS.

R 325.25102
Source: 2001 AACS.

R 325.25103
Source: 2001 AACS.

R 325.25104

Source: 2001 AACS.

R 325.25105
Source: 2001 AACS.

R 325.25106
Source: 2001 AACS.

PART 4. DEPARTMENT AND LOCAL HEALTH DEPARTMENT PROGRAM REQUIREMENTS, PROCEDURES, AND EVALUATIONS

R 325.25401
Source: 2001 AACS.

R 325.25402
Source: 2001 AACS.

R 325.25403
Source: 2001 AACS.

R 325.25404
Source: 2001 AACS.

R 325.25405
Source: 2001 AACS.

R 325.25502
Source: 2001 AACS.

R 325.25503
Source: 2001 AACS.

R 325.25504
Source: 2001 AACS.

R 325.25505
Source: 2001 AACS.

PART 6. TEMPORARY AND MOBILE FOOD SERVICE ESTABLISHMENTS

R 325.25601
Source: 2001 AACS.

R 325.25602
Source: 2001 AACS.

R 325.25603
Source: 2001 AACS.

R 325.25604
Source: 2001 AACS.

R 325.25605
Source: 2001 AACS.

R 325.25606

Source: 2001 AACS.

R 325.25607
Source: 2001 AACS.

PART 7. PLAN SUBMITTAL AND REVIEW

R 325.25701
Source: 2001 AACS.

R 325.25702
Source: 2001 AACS.

R 325.25703
Source: 2001 AACS.

R 325.25704
Source: 2001 AACS.

R 325.25705
Source: 2001 AACS.

R 325.25706
Source: 2001 AACS.

R 325.25707
Source: 2001 AACS.

R 325.25708
Source: 2001 AACS.

PART 8. LICENSING AND ENFORCEMENT

R 325.25801
Source: 2001 AACS.

R 325.25802
Source: 2001 AACS.

R 325.25803
Source: 2001 AACS.

R 325.25804
Source: 2001 AACS.

R 325.25805
Source: 2001 AACS.

R 325.25806
Source: 2001 AACS.

R 325.25807
Source: 2001 AACS.

PART 9. SURVEILLANCE AND INSPECTIONS

R 325.25901
Source: 2001 AACS.

R 325.25902
Source: 2001 AACS.

R 325.25903
Source: 2001 AACS.

R 325.25904
Source: 2001 AACS.

R 325.25905
Source: 2001 AACS.

R 325.25906
Source: 2001 AACS.

R 325.25907
Source: 2001 AACS.

R 325.25908
Source: 2001 AACS.

R 325.25909
Source: 2001 AACS.

R 325.25910
Source: 2001 AACS.

PART 10. VENTILATION

R 325.26001
Source: 2001 AACS.

R 325.26002
Source: 2001 AACS.

R 325.26003
Source: 2001 AACS.

R 325.26004
Source: 2001 AACS.

R 325.26005
Source: 2001 AACS.

R 325.26006
Source: 2001 AACS.

R 325.26007
Source: 2001 AACS.

R 325.26008
Source: 2001 AACS.

DEPARTMENT OF CONSUMER AND INDUSTRY SERVICES

OCCUPATIONAL HEALTH STANDARDS

OCCUPATIONAL HEALTH STANDARDS--CARCINOGENS

R 325.35001
Source: 2002 AACS.

R 325.35002
Source: 2002 AACS.

R 325.35003
Source: 2002 AACS.

R 325.35004
Source: 2002 AACS.

R 325.35005
Source: 2002 AACS.

R 325.35006
Source: 2002 AACS.

R 325.35007
Source: 2002 AACS.

R 325.35008
Source: 2002 AACS.

R 325.35009
Source: 2002 AACS.

R 325.35010
Source: 2002 AACS.

R 325.35011
Source: 2002 AACS.

MEDICAL SERVICES AND FIRST AID—GENERAL INDUSTRY

R 325.47201
Source: 2001 AACS.

ILLUMINATION

R 325.47801
Source: 2001 AACS.

METHYLENEDIANILINE (MDA)

R 325.50051
Source: 1993 AACS.

R 325.50052
Source: 1998-2000 AACS.

R 325.50053
Source: 1993 AACS.

R 325.50054
Source: 1998-2000 AACS.

R 325.50055
Source: 1993 AACS.

R 325.50056
Source: 1993 AACS.

R 325.50057
Source: 1993 AACS.

R 325.50058
Source: 1993 AACS.

R 325.50059
Source: 1993 AACS.

R 325.50060
Source: 1998-2000 AACS.

R 325.50061
Source: 1993 AACS.

R 325.50062
Source: 1993 AACS.

R 325.50063
Source: 1993 AACS.

R 325.50064
Source: 1993 AACS.

R 325.50065
Source: 1993 AACS.

R 325.50066
Source: 1993 AACS.

R 325.50067
Source: 1993 AACS.

R 325.50068
Source: 1993 AACS.

R 325.50069
Source: 1993 AACS.

R 325.50070
Source: 1993 AACS.

R 325.50071
Source: 1993 AACS.

R 325.50072
Source: 1993 AACS.

R 325.50073
Source: 1993 AACS.

R 325.50074
Source: 1998-2000 AACS.

R 325.50075
Source: 1998-2000 AACS.

R 325.50076
Source: 1998-2000 AACS.

1,3-BUTADIENE

R 325.50091
Source: 1997 AACS.

R 325.50092
Source: 1998-2000 AACS.

COKE OVEN EMISSIONS

R 325.50101
Source: 1998-2000 AACS.

R 325.50102
Source: 1998-2000 AACS.

R 325.50106
Source: 1987 AACS.

R 325.50107
Source: 1987 AACS.

R 325.50108
Source: 1987 AACS.

R 325.50109
Source: 1987 AACS.

R 325.50117
Source: 1998-2000 AACS.

R 325.50118
Source: 1998-2000 AACS.

R 325.50124
Source: 1998-2000 AACS.

R 325.50125
Source: 1998-2000 AACS.

R 325.50136
Source: 1998-2000 AACS.

R 325.50151

Source: 1998-2000 AACS.

PART 501. AGRICULTURAL OPERATIONS

R 325.50171
Source: 2002 AACS.

OCCUPATIONAL HEALTH STANDARDS

PART 2. TUNNELS, SHAFTS, CAISSONS, AND COFFERDAMS

R 325.50201
Source: 1997 AACS.

R 325.50202
Source: 1997 AACS.

R 325.50203
Source: 1997 AACS.

R 325.50204
Source: 1997 AACS.

R 325.50205
Source: 1997 AACS.

R 325.50206
Source: 1997 AACS.

R 325.50207
Source: 1997 AACS.

R 325.50208
Source: 1997 AACS.

R 325.50209
Source: 1997 AACS.

R 325.50210
Source: 1997 AACS.

R 325.50211
Source: 1997 AACS.

R 325.50212
Source: 1997 AACS.

R 325.50213
Source: 1997 AACS.

R 325.50214
Source: 1997 AACS.

R 325.50215
Source: 1997 AACS.

R 325.50216
Source: 1997 AACS.

R 325.50217
Source: 1997 AACS.

R 325.50218
Source: 1997 AACS.

R 325.50219
Source: 1997 AACS.

R 325.50220
Source: 1997 AACS.

R 325.50221
Source: 1997 AACS.

R 325.50222
Source: 1997 AACS.

R 325.50223
Source: 1997 AACS.

R 325.50224
Source: 1997 AACS.

R 325.50225
Source: 1997 AACS.

R 325.50226
Source: 1997 AACS.

R 325.50227
Source: 1997 AACS.

R 325.50228
Source: 1997 AACS.

R 325.50229
Source: 1997 AACS.

R 325.50230
Source: 1997 AACS.

R 325.50231
Source: 1997 AACS.

DEPARTMENT OF CONSUMER AND INDUSTRY SERVICES

DIRECTOR'S OFFICE

OCCUPATIONAL HEALTH STANDARDS--ABRASIVE BLASTING

R 325.50251
Source: 2001 AACS.

R 325.50252
Source: 2001 AACS.

R 325.50253
Source: 2001 AACS.

R 325.50254
Source: 2001 AACS.

R 325.50255
Source: 2001 AACS.

R 325.50256
Source: 2001 AACS.

R 325.50257
Source: 2001 AACS.

R 325.50258
Source: 2001 AACS.

ILLUMINATION

R 325.50902
Source: 2001 AACS.

R 325.51004
Source: 2001 AACS.

AIR CONTAMINANTS

R 325.51101
Source: 2001 AACS.

R 325.51103
Source: 2001 AACS.

R 325.51104
Source: 2001 AACS.

R 325.51105
Source: 2001 AACS.

R 325.51106
Source: 2001 AACS.

R 325.51107
Source: 1990 AACS.

R 325.51108
Source: 2001 AACS.

ETHYLENE OXIDE

R 325.51151
Source: 1993 AACS.

R 325.51152
Source: 1998-2000 AACS.

R 325.51153
Source: 1993 AACS.

R 325.51154
Source: 1993 AACS.

R 325.51155
Source: 1993 AACS.

R 325.51156
Source: 1993 AACS.

R 325.51157
Source: 1988 AACS.

R 325.51158
Source: 1988 AACS.

R 325.51159
Source: 1993 AACS.

R 325.51160
Source: 1988 AACS.

R 325.51161
Source: 1993 AACS.

R 325.51162
Source: 1998-2000 AACS.

R 325.51163
Source: 1998-2000 AACS.

R 325.51164
Source: 1988 AACS.

R 325.51165
Source: 1988 AACS.

R 325.51166
Source: 1988 AACS.

R 325.51167
Source: 1988 AACS.

R 325.51168
Source: 1988 AACS.

R 325.51169
Source: 1988 AACS.

R 325.51170
Source: 1993 AACS.

R 325.51171
Source: 1988 AACS.

R 325.51172
Source: 1993 AACS.

R 325.51173
Source: 1993 AACS.

R 325.51174
Source: 1993 AACS.

R 325.51175
Source: 1988 AACS.

R 325.51176
Source: 1988 AACS.

R 325.51177
Source: 1998-2000 AACS.

ASBESTOS STANDARDS FOR CONSTRUCTION

R 325.51301
Source: 1997 AACS.

R 325.51302
Source: 1998-2000 AACS.

ASBESTOS STANDARDS FOR GENERAL INDUSTRY

R 325.51311
Source: 1997 AACS.

R 325.51312
Source: 1998-2000 AACS.

DEPARTMENT OF CONSUMER AND INDUSTRY SERVICES

DIRECTOR'S OFFICE

OCCUPATIONAL HEALTH STANDARDS--VINYL CHLORIDE

R 325.51401
Source: 1998-2000 AACS.

R 325.51402
Source: 1998-2000 AACS.

R 325.51403
Source: 1998-2000 AACS.

R 325.51404
Source: 1998-2000 AACS.

R 325.51405
Source: 1998-2000 AACS.

R 325.51406
Source: 1998-2000 AACS.

R 325.51407

Source: 1998-2000 AACS.

R 325.51408
Source: 1998-2000 AACS.

R 325.51409
Source: 1998-2000 AACS.

R 325.51410
Source: 1998-2000 AACS.

R 325.51411
Source: 1998-2000 AACS.

R 325.51412
Source: 1998-2000 AACS.

R 325.51413
Source: 1998-2000 AACS.

R 325.51414
Source: 1998-2000 AACS.

FORMALDEHYDE

R 325.51451
Source: 1990 AACS.

R 325.51452
Source: 1998-2000 AACS.

R 325.51453
Source: 1993 AACS.

R 325.51454
Source: 1993 AACS.

R 325.51455
Source: 1993 AACS.

R 325.51456
Source: 1990 AACS.

R 325.51457
Source: 1990 AACS.

R 325.51458
Source: 1990 AACS.

R 325.51459
Source: 1990 AACS.

R 325.51460
Source: 1998-2000 AACS.

R 325.51461
Source: 1998-2000 AACS.

R 325.51462
Source: 1998-2000 AACS.

R 325.51463
Source: 1990 AACS.

R 325.51464
Source: 1990 AACS.

R 325.51465
Source: 1990 AACS.

R 325.51466
Source: 1990 AACS.

R 325.51467
Source: 1993 AACS.

R 325.51468
Source: 1990 AACS.

R 325.51469
Source: 1990 AACS.

R 325.51470
Source: 1998-2000 AACS.

R 325.51471
Source: 1993 AACS.

R 325.51472
Source: 1993 AACS.

R 325.51473
Source: 1993 AACS.

R 325.51474
Source: 1990 AACS.

R 325.51475
Source: 1993 AACS.

R 325.51476
Source: 1998-2000 AACS.

R 325.51477
Source: 1998-2000 AACS.

ACRYLONITRILE (AN)

R 325.51501
Source: 1980 AACS.

R 325.51502
Source: 1998-2000 AACS.

R 325.51503
Source: 1980 AACS.

R 325.51504
Source: 1980 AACS.

R 325.51505
Source: 1980 AACS.

R 325.51506
Source: 1980 AACS.

R 325.51507
Source: 1980 AACS.

R 325.51508
Source: 1980 AACS.

R 325.51509
Source: 1998-2000 AACS.

R 325.51510
Source: 1980 AACS.

R 325.51511
Source: 1993 AACS.

R 325.51512
Source: 1980 AACS.

R 325.51513
Source: 1980 AACS.

R 325.51514
Source: 1980 AACS.

R 325.51515
Source: 1980 AACS.

R 325.51516
Source: 1980 AACS.

R 325.51517
Source: 1998-2000 AACS.

R 325.51518
Source: 1980 AACS.

R 325.51519
Source: 1998-2000 AACS.

R 325.51520
Source: 1980 AACS.

R 325.51521
Source: 1980 AACS.

R 325.51522
Source: 1980 AACS.

R 325.51523
Source: 1980 AACS.

R 325.51524
Source: 1993 AACS.

R 325.51525
Source: 1993 AACS.

R 325.51526
Source: 1980 AACS.

R 325.51527
Source: 1998-2000 AACS.

INORGANIC ARSENIC (AS)

R 325.51601
Source: 1993 AACS.

R 325.51602
Source: 1998-2000 AACS.

R 325.51603
Source: 1980 AACS.

R 325.51604
Source: 1980 AACS.

R 325.51605
Source: 1980 AACS.

R 325.51606
Source: 1993 AACS.

R 325.51607
Source: 1980 AACS.

R 325.51608
Source: 1980 AACS.

R 325.51609
Source: 1980 AACS.

R 325.51610
Source: 1998-2000 AACS.

R 325.51611
Source: 1998-2000 AACS.

R 325.51612
Source: 1998-2000 AACS.

R 325.51613
Source: 1998-2000 AACS.

R 325.51614
Source: 1998-2000 AACS.

R 325.51615
Source: 1980 AACS.

R 325.51616
Source: 1980 AACS.

R 325.51617
Source: 1980 AACS.

R 325.51618
Source: 1998-2000 AACS.

R 325.51619
Source: 1998-2000 AACS.

R 325.51620
Source: 1980 AACS.

R 325.51621
Source: 1980 AACS.

R 325.51622
Source: 1993 AACS.

R 325.51623
Source: 1980 AACS.

R 325.51624
Source: 1980 AACS.

R 325.51625
Source: 1993 AACS.

R 325.51626
Source: 1980 AACS.

R 325.51627
Source: 1980 AACS.

R 325.51628
Source: 1998-2000 AACS.

DEPARTMENT OF CONSUMER AND INDUSTRY SERVICES

OCCUPATIONAL HEALTH STANDARDS COMMISSION

METHYLENE CHLORIDE

R 325.51651
Source: 1998-2000 AACS.

R 325.51652
Source: 1998-2000 AACS.

CADMIUM

R 325.51851
Source: 1998-2000 AACS.

R 325.51852

Source: 1998-2000 AACS.

R 325.51853
Source: 1993 AACS.

R 325.51854
Source: 1993 AACS.

R 325.51855
Source: 1998-2000 AACS.

R 325.51856
Source: 1998-2000 AACS.

R 325.51857
Source: 1993 AACS.

R 325.51858
Source: 1998-2000 AACS.

R 325.51859
Source: 1993 AACS.

R 325.51860
Source: 1993 AACS.

R 325.51861
Source: 1993 AACS.

R 325.51862
Source: 1998-2000 AACS.

R 325.51863
Source: 1998-2000 AACS.

R 325.51864
Source: 1993 AACS.

R 325.51865
Source: 1998-2000 AACS.

R 325.51866
Source: 1993 AACS.

R 325.51867
Source: 1993 AACS.

R 325.51868
Source: 1998-2000 AACS.

R 325.51869
Source: 1993 AACS.

R 325.51870
Source: 1998-2000 AACS.

R 325.51871
Source: 1993 AACS.

R 325.51872
Source: 1998-2000 AACS.

R 325.51873
Source: 1993 AACS.

R 325.51874
Source: 1993 AACS.

R 325.51875
Source: 1998-2000 AACS.

R 325.51876
Source: 1993 AACS.

R 325.51877
Source: 1993 AACS.

R 325.51878
Source: 1993 AACS.

R 325.51879
Source: 1998-2000 AACS.

R 325.51880
Source: 1998-2000 AACS.

R 325.51881
Source: 1993 AACS.

R 325.51882
Source: 1993 AACS.

R 325.51883
Source: 1998-2000 AACS.

R 325.51884
Source: 1993 AACS.

R 325.51885
Source: 1998-2000 AACS.

R 325.51886
Source: 1998-2000 AACS.

LEAD

R 325.51901
Source: 1998-2000 AACS.

R 325.51902
Source: 1998-2000 AACS.

R 325.51903
Source: 1998-2000 AACS.

R 325.51904
Source: 1998-2000 AACS.

R 325.51905
Source: 1998-2000 AACS.

R 325.51906
Source: 1998-2000 AACS.

R 325.51907
Source: 1981 AACS.

R 325.51908
Source: 1998-2000 AACS.

R 325.51909
Source: 1981 AACS.

R 325.51910
Source: 1981 AACS.

R 325.51911
Source: 1981 AACS.

R 325.51912
Source: 1981 AACS.

R 325.51913
Source: 1981 AACS.

R 325.51914
Source: 1998-2000 AACS.

R 325.51915
Source: 1984 AACS.

R 325.51916
Source: 1998-2000 AACS.

R 325.51916a
Source: 1984 AACS.

R 325.51916b
Source: 1984 AACS.

R 325.51917
Source: 1998-2000 AACS.

R 325.51918
Source: 1998-2000 AACS.

R 325.51919
Source: 1998-2000 AACS.

R 325.51920
Source: 1998-2000 AACS.

R 325.51921
Source: 1998-2000 AACS.

R 325.51922
Source: 1981 AACS.

R 325.51923
Source: 1981 AACS.

R 325.51924
Source: 1988 AACS.

R 325.51925
Source: 1981 AACS.

R 325.51926
Source: 1981 AACS.

R 325.51927
Source: 1981 AACS.

R 325.51928
Source: 1981 AACS.

R 325.51929
Source: 1998-2000 AACS.

R 325.51930
Source: 1998-2000 AACS.

R 325.51931
Source: 1988 AACS.

R 325.51931a
Source: 1998-2000 AACS.

R 325.51932
Source: 1998-2000 AACS.

R 325.51933
Source: 1988 AACS.

R 325.51934
Source: 1998-2000 AACS.

R 325.51935
Source: 1981 AACS.

R 325.51936
Source: 1981 AACS.

R 325.51937
Source: 1981 AACS.

R 325.51938
Source: 1981 AACS.

R 325.51938a
Source: 1988 AACS.

R 325.51939
Source: 1981 AACS.

R 325.51940
Source: 1981 AACS.

R 325.51941
Source: 1984 AACS.

R 325.51942
Source: 1981 AACS.

R 325.51943
Source: 1998-2000 AACS.

R 325.51944
Source: 1981 AACS.

R 325.51945
Source: 1981 AACS.

R 325.51946
Source: 1981 AACS.

R 325.51947
Source: 1981 AACS.

R 325.51948
Source: 1981 AACS.

R 325.51949
Source: 1998-2000 AACS.

R 325.51950
Source: 1981 AACS.

R 325.51950a
Source: 1984 AACS.

R 325.51950b
Source: 1984 AACS.

R 325.51951
Source: 1981 AACS.

R 325.51952
Source: 1981 AACS.

R 325.51953
Source: 1981 AACS.

R 325.51954
Source: 1981 AACS.

R 325.51955
Source: 1981 AACS.

R 325.51956
Source: 1981 AACS.

R 325.51957
Source: 1981 AACS.

R 325.51958
Source: 1998-2000 AACS.

LEAD EXPOSURE IN CONSTRUCTION

R 325.51991
Source: 1993 AACS.

R 325.51992
Source: 1998-2000 AACS.

HAZARDOUS WASTE OPERATIONS AND EMERGENCY RESPONSE

R 325.52101
Source: 1991 AACS.

R 325.52102
Source: 1998-2000 AACS.

R 325.52103
Source: 1998-2000 AACS.

R 325.52104
Source: 1991 AACS.

R 325.52105
Source: 1991 AACS.

R 325.52106
Source: 1991 AACS.

R 325.52107
Source: 1991 AACS.

R 325.52108
Source: 1991 AACS.

R 325.52109
Source: 1991 AACS.

R 325.52110
Source: 1991 AACS.

R 325.52111
Source: 1991 AACS.

R 325.52112
Source: 1991 AACS.

R 325.52113
Source: 1998-2000 AACS.

R 325.52114
Source: 1998-2000 AACS.

R 325.52115

Source: 1991 AACS.

R 325.52116
Source: 1991 AACS.

R 325.52117
Source: 1991 AACS.

R 325.52118
Source: 1998-2000 AACS.

R 325.52119
Source: 1991 AACS.

R 325.52120
Source: 1991 AACS.

R 325.52121
Source: 1991 AACS.

R 325.52122
Source: 1991 AACS.

R 325.52123
Source: 1991 AACS.

R 325.52124
Source: 1991 AACS.

R 325.52125
Source: 1998-2000 AACS.

R 325.52126
Source: 1991 AACS.

R 325.52127
Source: 1991 AACS.

R 325.52128
Source: 1991 AACS.

R 325.52129
Source: 1998-2000 AACS.

R 325.52130
Source: 1998-2000 AACS.

R 325.52131
Source: 1998-2000 AACS.

R 325.52132
Source: 1991 AACS.

R 325.52133
Source: 1991 AACS.

R 325.52134
Source: 1991 AACS.

R 325.52135
Source: 1998-2000 AACS.

R 325.52136
Source: 1991 AACS.

R 325.52137
Source: 1998-2000 AACS.

OCCUPATIONAL HEALTH STANDARDS

R 325.52201
Source: 2001 AACS.

R 325.52401
Source: 2001 AACS.

PART 525. GRINDING, POLISHING, AND BUFFING OPERATIONS

R 325.52501 Scope.
Rule 1. (1) These rules prescribe the use of exhaust hood enclosures and systems in removing dust, dirt, fumes, and gases generated through the grinding, polishing, or buffing of ferrous and nonferrous metals.
(2) These rules replace OH rule 3215.
History: 2003 MR 6, Eff. Apr. 1, 2003.

R 325.52502 Definitions.
Rule 2. (1) “Abrasive cutting-off wheels” means organic-bonded wheels, the thickness of which is not more than one forty-eighth of their diameter for those up to, and including, 20 inches in diameter, and not more than one-sixtieth of their diameter for those larger than 20 inches in diameter, used for operations such as cutting, cutting off, grooving, slotting, coping, and jointing. The wheels may be any of the following:
(a) "Solid" consisting of organic-bonded abrasive material throughout.
(b) "Steel centered" consisting of a steel disc with a rim of organic-bonded material molded around the periphery.
(c) "Inserted tooth" consisting of a steel disc with organic-bonded abrasive teeth or inserts mechanically secured around the periphery.
(2) “Belts” means all power-driven, flexible, coated bands used for grinding, polishing, or buffing purposes.
(3) “Branch pipe” means the part of an exhaust system piping that is connected directly to the hood or enclosure.
(4) “Cradle” means a movable fixture, upon which the part to be ground or polished is placed.
(5) “Disc wheels” means all power-driven rotatable discs faced with abrasive materials, artificial or natural, and used for grinding or polishing on the side of the assembled disc.
(6) “Entry loss” means the loss in static pressure caused by air flowing into a duct or hood. It is generally expressed in inches of water gauge.
(7) “Exhaust system” means a system consisting of branch pipes connected to hoods or enclosures, 1 or more header pipes, an exhaust fan, means for separating solid contaminants from the air flowing in the system, and a discharge stack to outside.
(8) “Grinding wheels” means all power-driven rotatable grinding or abrasive wheels, except disc wheels as defined in this standard, consisting of abrasive particles held together by artificial or natural bonds and used for peripheral grinding.
(9) “Header pipe (main pipe)” means a pipe into which 1 or more branch pipes enter and which connects such branch pipes to the remainder of the exhaust system.
(10) “Hoods and enclosures” means the partial or complete enclosure around the wheel or disc through which air enters an exhaust system during operation.
(11) “Horizontal double-spindle disc grinder” means a grinding machine carrying 2 power-driven, rotatable, coaxial, horizontal spindles upon the inside ends of which are mounted abrasive disc wheels used for grinding 2 surfaces simultaneously.
(12) “Horizontal single-spindle disc grinder” means a grinding machine carrying an abrasive disc wheel upon 1 or both ends of a power-driven, rotatable single horizontal spindle.
(13) “Polishing and buffing wheels” means all power-driven rotatable wheels composed all or in part of textile fabrics, wood, felt, leather, paper, and may be coated with abrasives on the periphery of the wheel for purposes of polishing, buffing, and

light grinding.
(14) "Portable grinder" means any power-driven rotatable grinding, polishing, or buffing wheel mounted in such manner that it may be manually manipulated.
(15) "Scratch-brush wheels" means all power-driven rotatable wheels made from wire or bristles and used for scratch cleaning and brushing purposes.
(16) "Swing-frame grinder" means any power-driven rotatable grinding, polishing, or buffing wheel mounted in such a manner that the wheel with its supporting framework can be manipulated over stationary objects.
(17) "Velocity pressure (vp)" means the kinetic pressure in the direction of flow necessary to cause a fluid at rest to flow at a given velocity. It is generally expressed in inches of water gauge.
(18) "Vertical-spindle disc grinder" means a grinding machine having a vertical, rotatable power-driven spindle carrying a horizontal abrasive disc wheel.
History: 2003 MR 6, Eff. Apr. 1, 2003.

R 325.52503 Application.
Rule 3. (1) An employer shall provide suitable hood or enclosures that are connected to exhaust systems for every establishment performing dry grinding, dry polishing, or buffing.
(2) Exhaust systems shall be operated continuously whenever operations are carried on, and shall be capable of preventing contaminants from entering the breathing zone of employees.
History: 2003 MR 6, Eff. Apr. 1, 2003.

R 325.52504 Hood and branch pipe requirements.
Rule 4. (1) An employer shall ensure that hoods connected to exhaust systems be used, and hoods shall be designed, located, and placed so that dust or dirt particles shall fall or be projected into the hoods in the direction of the airflow. Wheels, discs, straps or belts shall not be operated in such manner and in such direction as to cause the dust and dirt particles to be thrown into the operator's breathing zone.
(2) Grinding wheels on floor stands, pedestals, benches, and special-purpose grinding machines and abrasive cutting-off wheels shall have not less than the minimum exhaust volumes specified in Table G-4 with a recommended minimum duct velocity of 4,500 feet per minute in the branch and 3,500 feet per minute in the main. The entry losses from all hoods, except the vertical-spindle disc grinder hood, shall equal 0.65 velocity pressure for a straight takeoff and 0.45 velocity pressure for a tapered takeoff. The entry loss for the vertical-spindle disc grinder hood is in Figure G-1. If any wheel is wider than wheel diameters shown in Table G-4, then the exhaust volume shall be increased by the ratio of the new width to the width shown.
Example: If wheel width = 4 1/2 inches, then 4.5 ÷ 4 x 610 = 686 (rounded to 690).

Table G-4
Grinding and Abrasive Cutting-off Wheels

Wheel Diameter (inches)	Wheel Width (inches)	Minimum Exhaust Volume ($feet^3$/min.)
To 9	1 1/2	220
Over 9 to 16	2	390
Over 16 to 19	3	500
Over 19 to 24	4	610
Over 24 to 30	5	880
Over 30 to 36	6	1,200

(3) Scratch-brush wheels and all buffing and polishing wheels mounted on floor stands, pedestals, benches, or special-purpose machines shall have not less than the minimum exhaust volume specified in Table G-5.

Table G-5
Buffing and Polishing Wheels

Wheel Diameter (inches)	Wheel Width (inches)	Minimum Exhaust Volume (feet^3/min.)
To 9	2	300
Over 9 to 16	3	500
Over 16 to 19	4	610
Over 19 to 24	5	740
Over 24 to 30	6	1,040
Over 30 to 36	6	1,200

(4) Grinding wheels or discs for horizontal single-spindle disc grinders shall be hooded to collect the dust or dirt generated by the grinding operation and the hoods shall be connected to branch pipes having exhaust volumes as specified in Table G-6.

Table G-6
Horizontal Single-Spindle Disc Grinder

Disc Diameter (inches)	Exhaust Volume (feet^3/min.)
Up to 12	220
Over 12 to 19	390
Over 19 to 30	610
Over 30 to 36	880

(5) Grinding wheels or discs for horizontal double-spindle disc grinders shall have a hood enclosing the grinding chamber. The hood shall be connected to 1 or more branch pipes having exhaust volumes as specified in Table G-7.

Table G-7
Horizontal Double-Spindle Disc Grinder

Disc Diameter (inches)	Exhaust Volume (feet^3/min.)
Up to 19	610
Over 19 to 25	880
Over 25 to 30	1,200
Over 30 to 53	1,770
Over 53 to 72	6,280

(6) Grinding wheels or discs for vertical single-spindle disc grinders shall be encircled with hoods to remove the dust generated in the operation. The hoods shall be connected to 1 or more branch pipes having exhaust volumes as specified in Table G-8.

Table G-8
Vertical Spindle Disc Grinder

Disc Diameter (inches)	One-half or more of disc covered		Disc not covered	
	Number[1]	Exhaust (ft.^{3}/min)	Number[1]	Exhaust (ft.^{3}/min)
Up to 20	1	500	2	780

Over 20 to 30	2	780	2	1,480
Over 30 to 53	2	1,770	4	3,530
Over 53 to 72	2	3,140	5	6,010

[1]Number of exhaust outlets around periphery of hood, or equal distribution provided by other means.

(7) Grinding and polishing belts shall be provided with hoods to remove dust and dirt generated in the operations and the hoods shall be connected to branch pipes having exhaust volumes as specified in Table G-9.

Table G-9
Grinding and Polishing Belts

Belts Width (inches)	Exhaust Volume ($feet^3$/min.)
Up to 3	220
Over 3 to 5	300
Over 5 to 7	390
Over 7 to 9	500
Over 9 to 11	610
Over 11 to 13	740

(8) Cradles and swing-frame grinders. If cradles are used for handling the parts to be ground, polished, or buffed, requiring large partial enclosures to house the complete operation, then a minimum average air velocity of 150 feet per minute shall be maintained over the entire opening of the enclosure. Swing-frame grinders shall be exhausted in the same manner as provided for cradles. (See Fig. G-3).
(9) If the work is outside the hood, then air volumes shall be increased as shown in American Standard Fundamentals Governing the Design and Operation of Local Exhaust Systems, Z9.2-1960 (section 4, exhaust hoods). ANSI Z9.2-1960 is adopted by reference in this rule. Printed copies of ANSI Z9.2-1960 are available from Global Engineering Documents, 15 Inverness Way East, Englewood, Colorado 80112, telephone number 1-800-854-7179, website: www.global.ihs.com, at a cost as of the time of adoption of these rules of $27.00 or is available for inspection at the Michigan Department of Consumer and Industry Services, Standards Division, 7150 Harris Drive, P.O. Box 30643, Lansing, Michigan 48909.
History: 2003 MR 6, Eff. Apr. 1, 2003.

R 325.52505 Exhaust systems.
Rule 5. (1) An employer shall ensure that exhaust systems for grinding, polishing, and buffing operations be designed in compliance with American Standard Fundamentals Governing the Design and Operation of Local Exhaust Systems, Z9.2-1960.
(2) Exhaust systems for grinding, polishing, and buffing operations shall be tested as specified in American Standard Fundamentals Governing the Design and Operation of Local Exhaust Systems, Z9.2-1960.
(3) All exhaust systems shall be provided with suitable dust collectors.
History: 2003 MR 6, Eff. Apr. 1, 2003.

R 325.52506 Hood and enclosure design.
Rule 6. (1) It is the dual function of grinding and abrasive cutting-off wheel hoods to protect the operator from the hazards of bursting wheels and to provide a means for the removal of dust and dirt generated. All hoods shall be not less in structural strength than specified in the American National Standard Safety Code for the Use, Care, and Protection of Abrasive Wheels, B7.1-1970. ANSI B7.1-1970 is adopted by reference in this rule. Printed copies of ANSI B7.1-1970 are available from Global Engineering Documents, 15 Inverness Way East, Englewood, Colorado 80112, telephone number 1-800-854-7179, website: www.global.ihs.com, at a cost as of the time of adoption of these rules of $45.00 or is available for inspection at the Michigan Department of Consumer and Industry Services, Standards Division, 7150 Harris Drive, P.O. Box 30643, Lansing, Michigan 48909.
(2) Due to the variety of work and types of grinding machines employed, hoods shall adapt to the particular machine in question, and such hoods shall be located as close as possible to the operation.
(3) Exhaust hoods for floor stands, pedestals, and bench grinders shall be designed in accordance with Figure G-2. The

adjustable tongue shown in the figure shall be kept in working order and shall be adjusted within one-fourth inch of the wheel periphery at all times.
(4) Swing-frame grinders shall be provided with exhaust booths as indicated in Figure G-3.
(5) Portable grinding operations, whenever the nature of the work permits, shall be conducted within a partial enclosure. The opening in the enclosure shall not be larger than is actually required in the operation and an average face air velocity of not less than 200 feet per minute shall be maintained.
(6) Hoods for polishing and buffing and scratch-brush wheels shall be constructed to conform as closely to Figure G-4 as the nature of the work will permit.
(7) Cradle grinding and polishing operations shall be performed with a partial enclosure similar to Figure G-5. The operator shall be positioned outside the working face of the opening of the enclosure. The face opening of the enclosure should not be greater in area than that required for the performance of the operation, and the average air velocity into the working face of the enclosure shall not be less than 150 feet per minute.
(8) Hoods for horizontal single-spindle disc grinders shall be constructed to conform as closely as possible to the hood shown in Figure G-6. There shall be a space between the back of the wheel and the hood, and a space around the periphery of the wheel of at least 1 inch to permit the suction to act around the wheel periphery. The opening on the side of the disc shall not be larger than is required for the grinding operation, but shall not be less than twice the area of the branch outlet.
(9) Horizontal double-spindle disc grinders shall have a hood encircling the wheels and grinding chamber similar to that illustrated in Figure G-7. The openings for passing the work into the grinding chamber should be kept as small as possible, but shall not be less than twice the area of the branch outlets.
(10) Vertical-spindle disc grinders shall be encircled with a hood constructed so that the heavy dust is drawn off a surface of the disc and the lighter dust exhausted through a continuous slot at the top of the hood as shown in Figure G-1.
(11) Grinding and polishing belt hoods shall be constructed as close to the operation as possible. The hood should extend almost to the belt, and 1-inch openings should be provided on either side. Figure G-8 shows a typical hood for a belt operation.

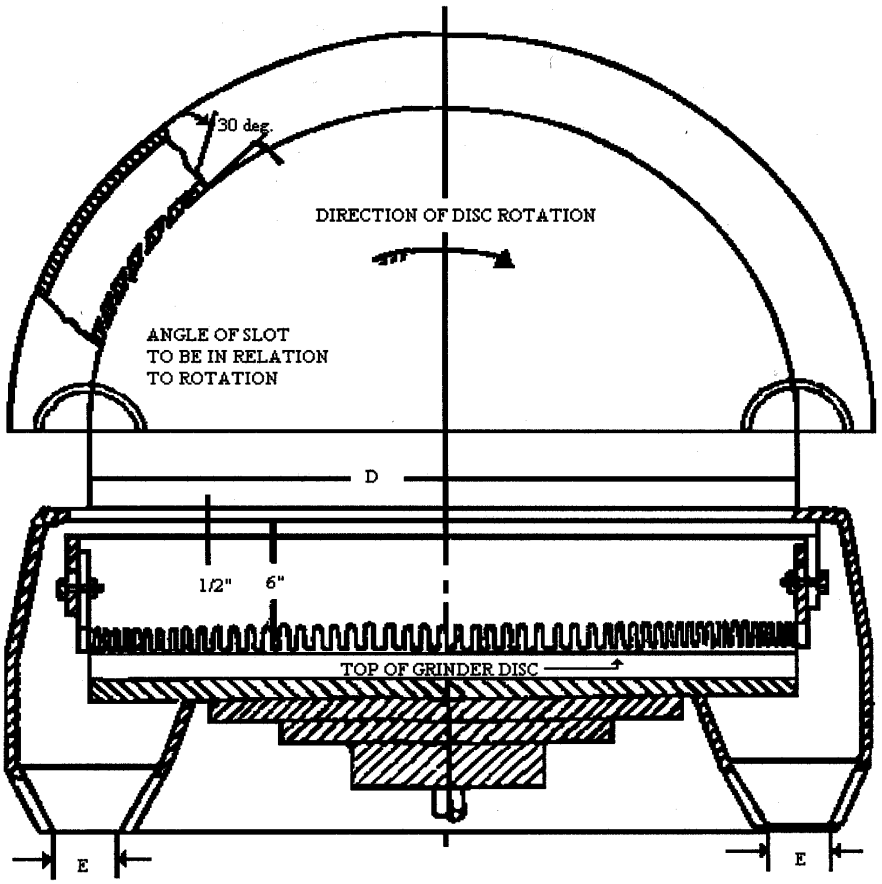
30 deg.
DIRECTION OF DISC ROTATION
ANGLE OF SLOT
TO BE IN RELATION
TO ROTATION
D
1/2"
6"
TOP OF GRINDER DISC
E
E

Figure G-1
Vertical Spindle Disc Grinder Exhaust Hood and Branch Pipe Connections

Diameter D. Inches		Exhaust E		Volume Exhausted at 4,500 ft/min ft^3/min	Note
Min.	Max.	No. Pipes	Diameter		
	20	1	4 ¼	500	When one-half or more of the disc can be hooded, use exhaust ducts as shown at the left.
Over 20	30	2	4	780	
Over 30	72	2	6	1,770	
Over 53	72	2	8	3,140	
	20	2	4	780	When no hood can be used over disc, use exhaust ducts as shown at left.
Over 20	20	2	4	780	
Over 30	30	2	5 ½	1,480	
Over 53	53	4	6	3,530	
	72	5	7	6,010	

Entry loss = 1.0 slot velocity pressure + 0.5 branch velocity pressure.
Minimum slot velocity = 2,000 ft/min - 1/2 inch slot width.

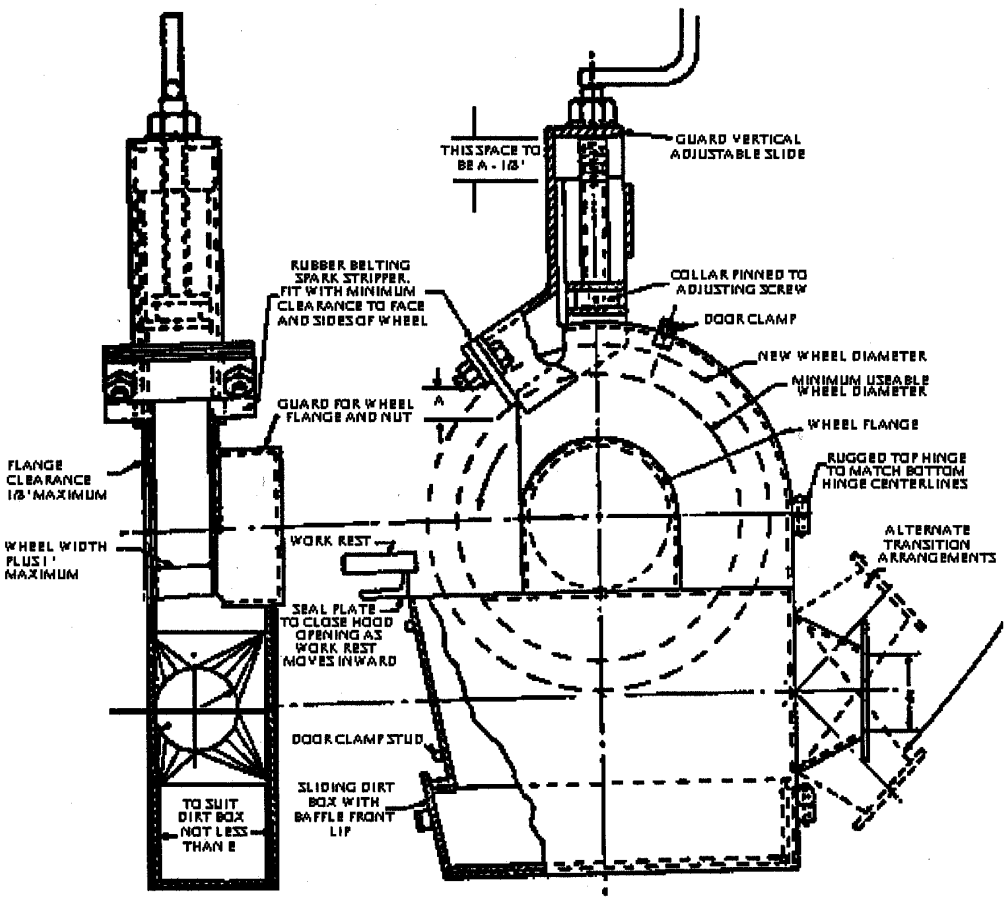

*Figure D-37.2 -- Standard Grinder Hood

Figure G-2
Standard Grinder Hood

Wheel Dimension, Inches			Exhaust Outlet, Inches E	Volume of Air at 4,500 ft/min
Diameter		Width, Maximum		
Minimum = d	Maximum = D			
	9	1 ½	3	220
Over 9	16	2	4	390
Over 16	19	3	4 1/2	500
Over 19	24	4	5	610
Over 24	30	5	6	880
Over 30	36	6	7	1,200

Entry loss = 0.45 velocity pressure for tapered takeoff;
0.65 velocity pressure for straight takeoff.

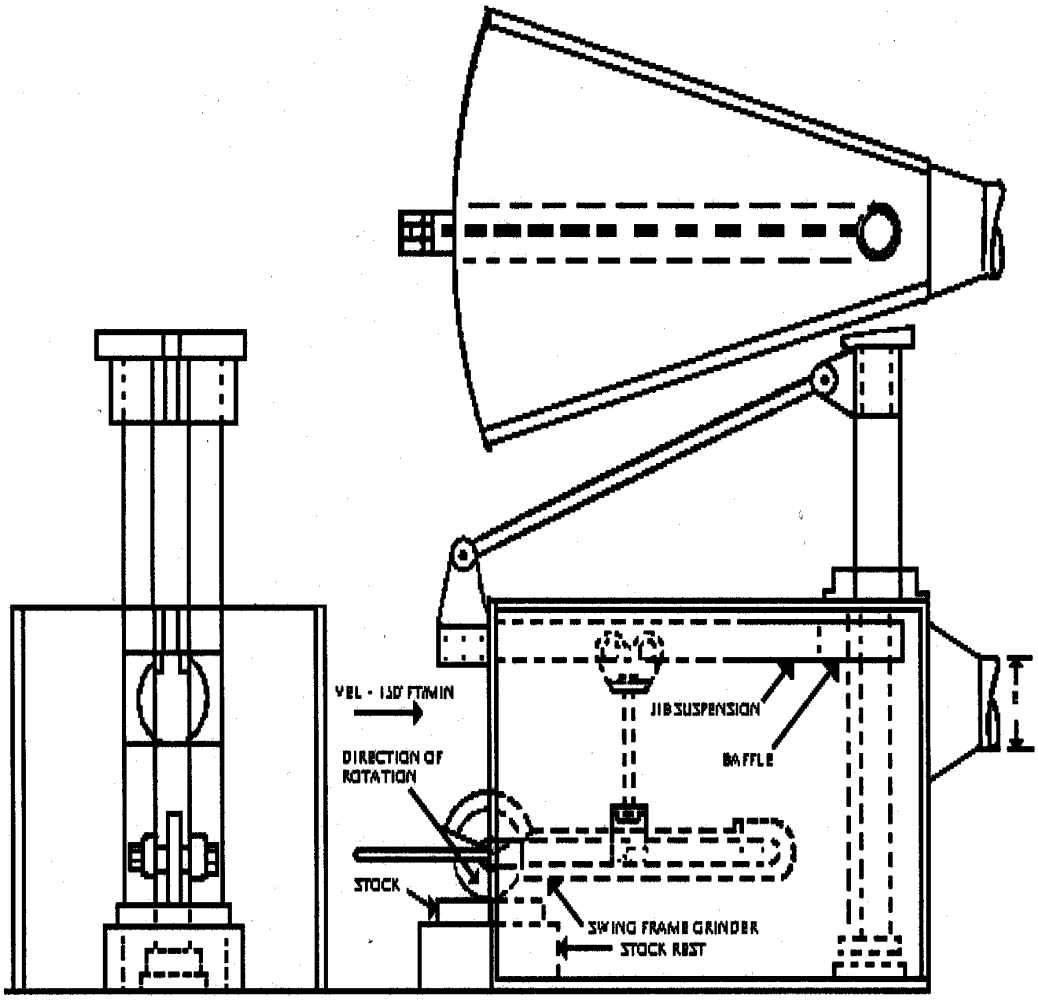
VEL - 130' FT/MIN
DIRECTION OF ROTATION
STOCK
JIB SUSPENSION
BAFFLE
SWING FRAME GRINDER
STOCK REST

Figure G-3

A Method of Applying an Exhaust Enclosure to Swing-Frame Grinders

Note: Baffle to reduce front opening as much as possible.

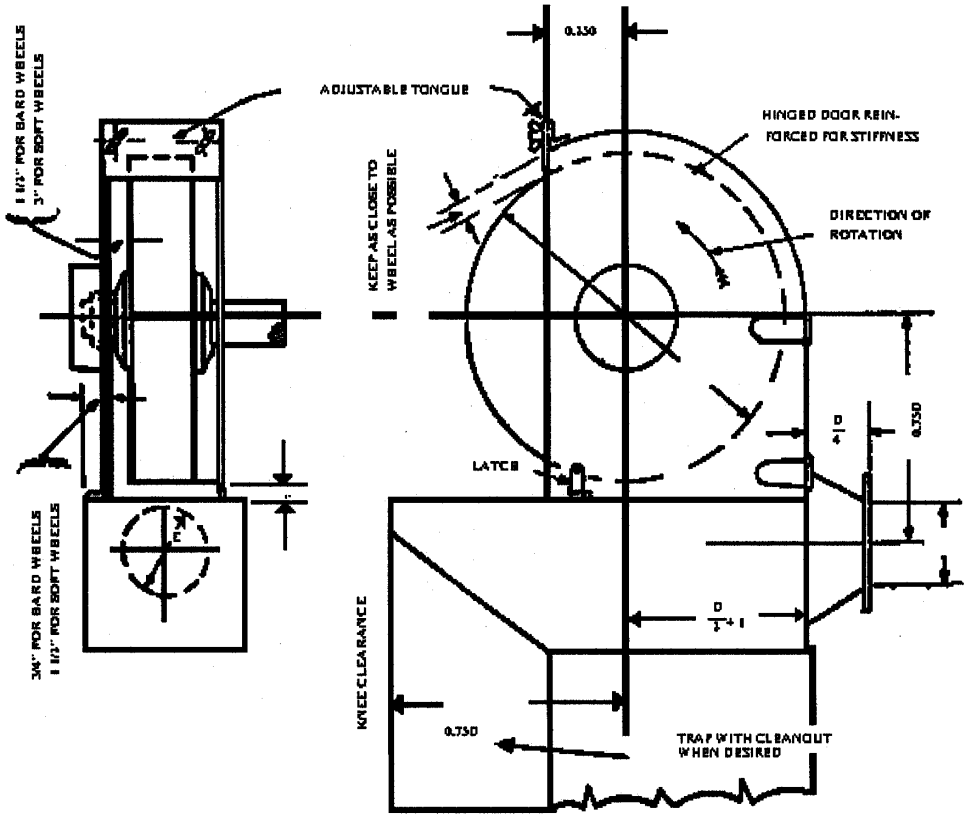

Figure G-4

Standard Buffing and Polishing Hood

Wheel Dimension, Inches			Exhaust Outlet, Inches E	Volume of Air at 4,500 ft/min
Diameter		Width Max		
Min = d	Max = D			
	9	2	3 1/2	300
Over 9	16	3	4	500
Over 16	19	4	5	610
Over 19	24	5	5 1/2	740
Over 24	30	6	6 1/2	1,040
Over 30	36	6	7	1,200

Entry loss = 0.15 velocity pressure for tapered takeoff;
0.65 velocity pressure for straight takeoff.

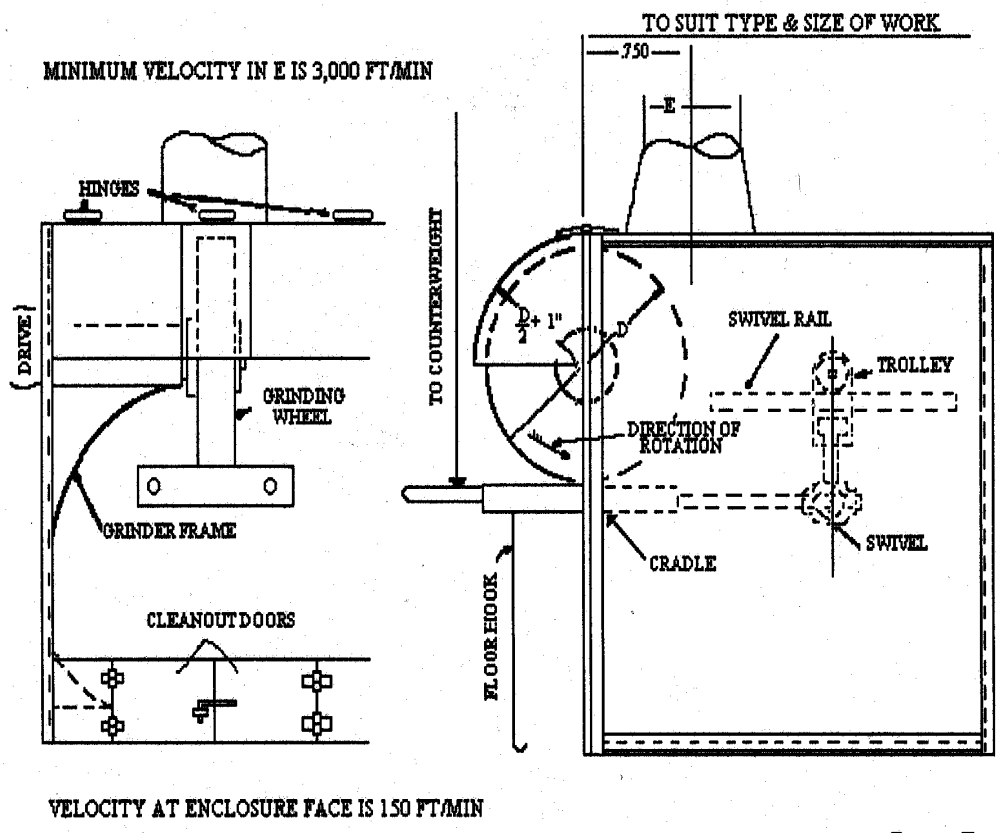

Figure G-5
Cradle Polishing or Grinding Enclosure
Entry loss = 0.45 velocity pressure for tapered takeoff.

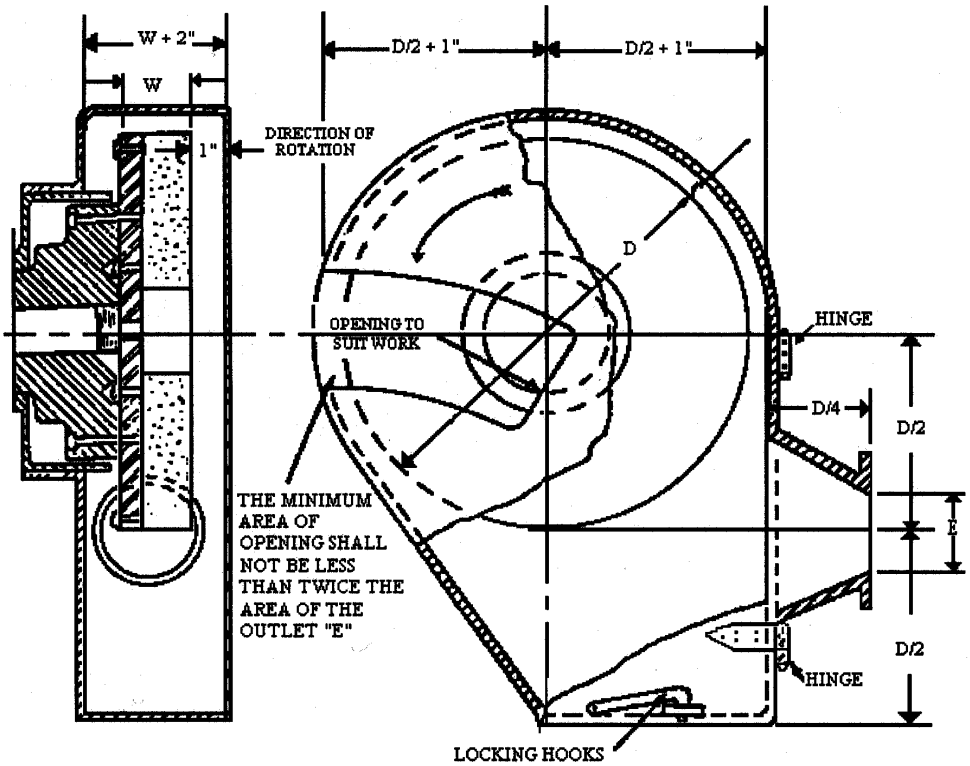

Figure G-6

Horizontal Single-Spindle Disc Grinder Exhaust Hood and Branch Pipe Connections

Diameter D, Inches		Exhaust E Dia. Inches	Volume Exhausted at 4,500 ft/min ft^3/min
Min.	Max.		
	12	3	220
Over 12	19	4	390
Over 19	30	5	610
Over 30	36	6	880

NOTE: If grinding wheels are used for disc grinding purposes, hoods must conform to structural strength and materials as described in 9.1.
Entry loss = 0.45 velocity pressure for tapered takeoff.

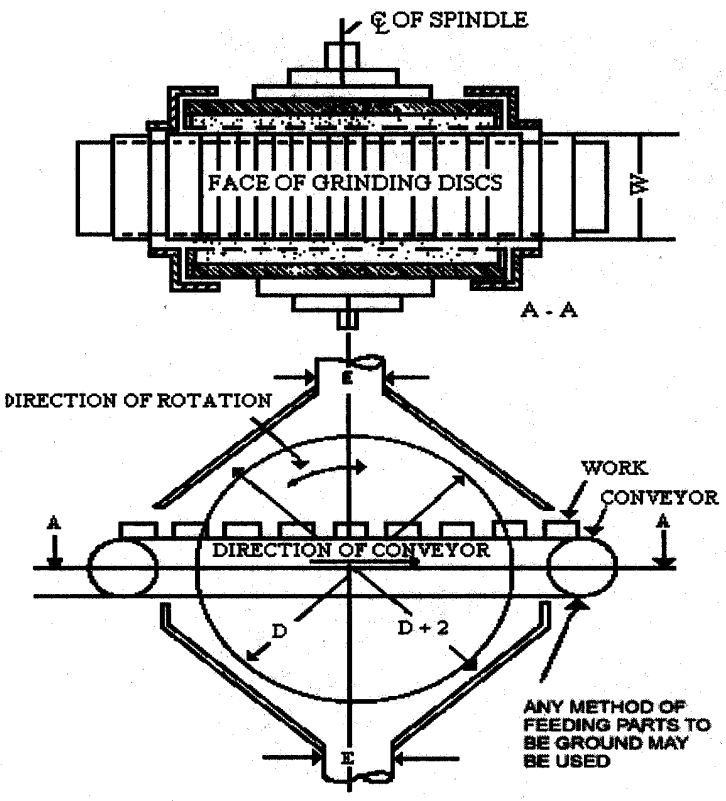

Figure G-7
Horizontal Double-Spindle Disc Grinder Exhaust Hood and Branch Pipe Connections

Disc Diameter Inches		Exhaust E		Volume Exhausted at 4,500 ft/min ft^3/min	Note
Min.	Max.	No. Pipes	Dia.		
	19	1	5	610	When width "W" permits, exhaust ducts should be as near heaviest grinding as possible.
Over 19	25	1	6	880	
Over 25	30	1	7	1,200	
Over 30	53	2	6	1,770	
Over 53	72	4	8	6,280	

Entry loss = 0.45 velocity pressure for tapered takeoff.

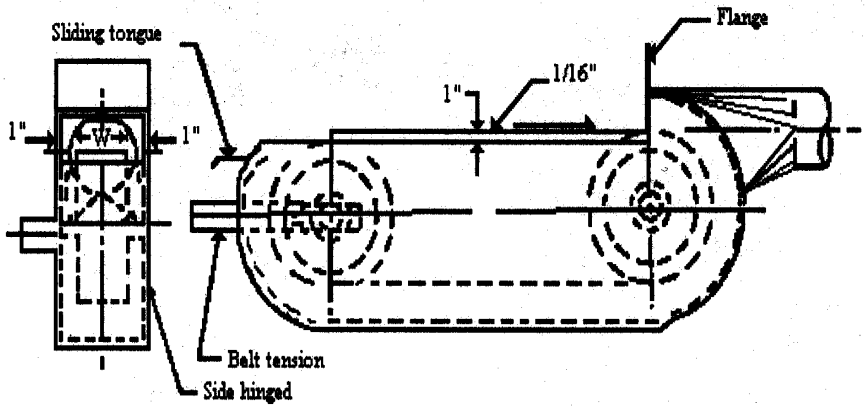

Figure G-8
A Typical Hood for a Belt Operation

Belt Width W. Inches	Exhaust Volume, ft^3/min
Up to 3	220
3 to 5	300
5 to 7	390
7 to 9	500
9 to 11	610
11 to 13	740

Minimum duct velocity = 4,500 ft/min branch, 3,500 ft/min main.
Entry loss = 0.45 velocity pressure for tapered takeoff; 0.65 velocity pressure for straight takeoff.
History: 2003 MR 6, Eff. Apr. 1, 2003.

R 325.52701
Source: 2001 AACS.

PERSONAL PROTECTIVE EQUIPMENT

R 325.60001
Source: 1998-2000 AACS.

R 325.60002
Source: 1995 AACS.

R 325.60003
Source: 1995 AACS.

R 325.60004
Source: 1995 AACS.

R 325.60005
Source: 1998-2000 AACS.

R 325.60006
Source: 1995 AACS.

R 325.60007
Source: 1998-2000 AACS.

R 325.60008
Source: 1998-2000 AACS.

R 325.60009
Source: 1998-2000 AACS.

R 325.60010
Source: 1995 AACS.

R 325.60011
Source: 1995 AACS.

R 325.60012
Source: 1995 AACS.

R 325.60013
Source: 1998-2000 AACS.

USE OF RESPIRATORS IN DANGEROUS ATMOSPHERES

R 325.60022
Source: 1998-2000 AACS.

RESPIRATORY PROTECTION

R 325.60051
Source: 1998-2000 AACS.

R 325.60052
Source: 1998-2000 AACS.

OCCUPATIONAL NOISE EXPOSURE

R 325.60101
Source: 1986 AACS.

R 325.60102
Source: 1986 AACS.

R 325.60103
Source: 1986 AACS.

R 325.60104
Source: 1986 AACS.

R 325.60105
Source: 1986 AACS.

R 325.60106
Source: 1986 AACS.

R 325.60107
Source: 1986 AACS.

R 325.60108
Source: 1986 AACS.

R 325.60109
Source: 1986 AACS.

R 325.60110
Source: 1986 AACS.

R 325.60111
Source: 1986 AACS.

R 325.60112
Source: 1986 AACS.

R 325.60113
Source: 1986 AACS.

R 325.60114
Source: 1986 AACS.

R 325.60115
Source: 1993 AACS.

R 325.60116
Source: 1986 AACS.

R 325.60117
Source: 1986 AACS.

R 325.60118
Source: 1986 AACS.

R 325.60119
Source: 1993 AACS.

R 325.60120
Source: 1993 AACS.

R 325.60121
Source: 1993 AACS.

R 325.60122
Source: 1993 AACS.

R 325.60123
Source: 1986 AACS.

R 325.60124
Source: 1986 AACS.

R 325.60125
Source: 1993 AACS.

R 325.60126
Source: 1986 AACS.

R 325.60127
Source: 1993 AACS.

R 325.60128
Source: 1993 AACS.

DEPARTMENT OF CONSUMER AND INDUSTRY SERVICES

DIRECTOR'S OFFICE

OCCUPATIONAL HEALTH STANDARDS--NOISE EXPOSURE FOR CONSTRUCTION

R 325.60131
Source: 1998-2000 AACS.

AIR CONTAMINANTS FOR CONSTRUCTION

R 325.60151
Source: 2002 AACS.

R 325.60152
Source: 2002 AACS.

R 325.60153
Source: 2002 AACS.

R 325.60154
Source: 2002 AACS.

R 325.60155
Source: 2002 AACS.

R 325.60156
Source: 2002 AACS.

R 325.60157
Source: 2002 AACS.

R 325.60158
Source: 2002 AACS.

R 325.60159
Source: 2002 AACS.

R 325.60160
Source: 2002 AACS.

R 325.60161
Source: 2002 AACS.

OCCUPATIONAL HEALTH STANDARDS COMMISSION

PART 382. NONIONIZING RADIATION

R 325.60701
Source: 2002 AACS.

R 325.60702
Source: 2002 AACS.

R 325.60703
Source: 2002 AACS.

R 325.60704
Source: 2002 AACS.

AGRICULTURAL FIELD SANITATION

R 325.61751
Source: 1997 AACS.

R 325.61752
Source: 1997 AACS.

R 325.61753
Source: 1997 AACS.

R 325.61754
Source: 1997 AACS.

R 325.61755
Source: 1997 AACS.

R 325.61756
Source: 1997 AACS.

R 325.61757
Source: 1997 AACS.

OH STANDARD RULE 6610 - MEDICAL SERVICES AND FIRST AID

R 325.66201
Source: 2002 AACS.

UNDERGROUND CONSTRUCTION, CAISSONS, COFFERDAMS, AND COMPRESSED AIR

R 325.62991
Source: 1998-2000 AACS.

R 325.62992
Source: 1998-2000 AACS.

R 325.62993
Source: 1998-2000 AACS.

R 325.62994
Source: 1998-2000 AACS.

R 325.62995

Source: 1995 AACS.

R 325.62996
Source: 1998-2000 AACS.

PERMIT-REQUIRED CONFINED SPACES

R 325.63001
Source: 1998-2000 AACS.

R 325.63002
Source: 1998-2000 AACS.

R 325.63049
Source: 1998-2000 AACS.

BLOODBORNE INFECTIOUS DISEASES

R 325.70001
Source: 2001 AACS.

R 325.70002
Source: 2001 AACS.

R 325.70003
Source: 1993 AACS.

R 325.70004
Source: 2001 AACS.

R 325.70005
Source: 1996 AACS.

R 325.70006
Source: 1993 AACS.

R 325.70007
Source: 1996 AACS.

R 325.70008
Source: 1996 AACS.

R 325.70009
Source: 1996 AACS.

R 325.70010
Source: 1993 AACS.

R 325.70011
Source: 1993 AACS.

R 325.70012
Source: 1996 AACS.

R 325.70013
Source: 1996 AACS.

R 325.70014
Source: 1993 AACS.

R 325.70015
Source: 2001 AACS.

R 325.70016
Source: 1996 AACS.

R 325.70017
Source: 1996 AACS.

R 325.70018
Source: 1996 AACS.

HAZARDOUS WORK IN LABORATORIES
PART 431. HAZARDOUS WORK IN LABORATORIES

R 325.70101 Scope; effective date of subrule (2)
Rule 1. (1) These rules set forth the requirements for laboratory use of hazardous chemicals. Subjects to which these rules apply include all of the following:
(a) Exposure limits.
(b) Exposure monitoring.
(c) Written chemical hygiene plan.
(d) Employee information and training.
(e) Medical surveillance.
(f) Hazard identification.
(g) Use of respiratory protection.
(h) Recordkeeping.
(2) These rules, where they apply as specified in R 325.70102, supersede all Michigan occupational safety and health act (MIOSHA) occupational health standards that govern the use of specific chemical substances, except as provided in R 325.70104, R 325.70105, and R 325.70108. Also, where they apply, these rules supersede the requirements of the occupational safety and health administration (OSHA) hazard communication standard, being 29 C.F.R. §1910.1200, which is incorporated by section 14a of 1974 PA 154, MCL 408.1014a. This subrule takes effect when an employer has developed and implemented a written chemical hygiene plan as prescribed by R 325.70106.
(3) All occupational health standards that do not deal with a specific chemical substance apply to laboratory operations as do any occupational safety standards administered by the Michigan department of consumer and industry services. Such non-chemical substance standards that apply to laboratory operations include all of the following rules:
(a) Occupational noise exposure, Part 380., R 325.60101 et seq.
(b) Ionizing radiation, Part 381., O.H. 2410 et seq.
(c) Nonionizing radiation, Part 382., R 325.60701 et seq.
(d) Ventilation control, Part 520., O.H. 3101 et seq.
(e) Permit-required confined spaces, Part 490., R 325.63001 et seq.
(f) Respiratory protection, Part 451., R 325.60051 et seq.
(g) Illumination, Part 478., R 325.47801 et seq.
(h) Sanitation, Part 474., O.H. 4201 et seq.
(i) Medical services and first aid, Part 472., R 325.47201 et seq.
(j) Employee medical records and trade secrets, Part 470., R 325.3451 et seq.
History: 1992 MR 1, Eff. Jan. 25, 1992; 2003 MR 15, Eff. Aug. 5, 2003.

R 325.70102 Application
Rule 2. (1) These rules apply to all employers who have an employee or employees involved in the laboratory use of hazardous chemicals as defined in R 325.70103.
(2) These rules do not apply to either of the following:
(a) Work involving chemicals that do not meet the conditions of the definition of laboratory use of hazardous chemicals. In such cases, the employer shall comply with all relevant specific substance standards even if such use occurs in a laboratory

type setting.
(b) Work involving the laboratory use of hazardous chemicals that does not have the potential for employee exposure.
History: 1992 MR 1, Eff. Jan. 25, 1992; 2003 MR 15, Eff. Aug. 5, 2003.

R 325.70103 Definitions
Rule 3. As used in these rules:
(a) "Action level" means a concentration which is designated in established MIOSHA health standards for a specific substance, calculated as an 8-hour, time-weighted average, and which initiates certain required activities, such as exposure monitoring and medical surveillance.
(b) "Chemical hygiene officer" means an employee who is designated by the employer, and who is qualified by training or experience, to provide technical guidance in the development and implementation of the provisions of the chemical hygiene plan. This definition is not intended to place limitations on the position description or job classification that the designated individual shall hold within the employer's organizational structure.
(c) "Chemical hygiene plan" means a written program which is developed and implemented by the employer, which sets forth procedures, equipment, personal protective equipment, and work practices that are capable of protecting employees from the health hazards presented by the hazardous chemicals used in a particular workplace, and which is in compliance with the requirements of R 325.70106.
(d) "Director" means the director of the Michigan department of consumer and industry services or his or her designee.
(e) "Emergency" means any occurrence, such as equipment failure, the rupture of containers, or the failure of control equipment, that results in an uncontrolled release of a hazardous chemical into the workplace.
(f) "Employee" means a person who is assigned to work in a laboratory workplace and who may be exposed to hazardous chemicals in the course of his or her assignments.
(g) "Hazardous chemical" means a chemical for which there is statistically significant evidence, based on at least 1 study that is conducted in accordance with established scientific principles, that acute or chronic health effects may occur in employees who are exposed to the chemical. These health effects include those that result from exposure to chemicals which are any of the following:
(i) Carcinogens.
(ii) Toxic or highly toxic agents.
(iii) Reproductive toxins.
(iv) Irritants.
(v) Corrosives.
(vi) Sensitizers.
(vii) Hepatotoxins.
(viii) Nephrotoxins.
(ix) Neurotoxins.
(x) Agents that act on the hematopoietic systems.
(xi) Agents that damage the lungs, skin, eyes, or mucous membranes.
Appendices A and B of the OSHA hazard communications standard, being 29 C.F.R. §1910.1200 and referenced in R 325.70101(2), provide further guidance in defining the scope of health hazards and determining whether or not a chemical is to be considered hazardous for purposes of these rules.
(h) "Laboratory" means a facility where the laboratory use of hazardous chemicals occurs. It is a workplace where relatively small quantities of hazardous chemicals are used on a nonproduction basis.
(i) "Laboratory-type hood" means a work chamber which is used in a laboratory, which is enclosed on 5 sides and has a moveable sash or fixed partial closure on the remaining side, which is constructed and maintained to draw air from the laboratory and prevent or minimize the escape of air contaminants into the laboratory, and which allows chemical manipulations to be conducted in the enclosure without inserting any portion of the employee's body other than hands and arms. The term includes walk-in hoods with adjustable sashes if the sashes are adjusted during use so that the airflow and the exhaust of air contaminants are not compromised and so that employees do not work inside the enclosure during the release of airborne hazardous chemicals.
(j) "Laboratory use of hazardous chemicals" means the handling or use of such chemicals in which all of the following conditions are met:
(i) Chemical manipulations are carried out on a laboratory scale.
(ii) Multiple chemical procedures or chemicals are used.
(iii) The procedures that are involved are not part of production process, nor in any way simulate a production process.
(iv) Protective laboratory practices and equipment are available and in common use to minimize the potential for employee

exposure to hazardous chemicals.
(k) "Medical consultation" means a consultation that takes place between an employee and a licensed physician to determine what medical examinations or procedures, if any, are appropriate.
(l) "Physical hazard" means a chemical for which there is scientifically valid evidence that it is any of the following:
(i) A combustible liquid.
(ii) A compressed gas.
(iii) Explosive.
(iv) Flammable.
(v) An organic peroxide.
(vi) An oxidizer.
(vii) Pyrophoric.
(viii) Unstable (reactive).
(ix) Water-reactive.
These terms are defined in appendix B of these rules.
(m) "Production" means the manufacturing processes that use hazardous chemicals and result in a product.
(n) "Protective laboratory practices and equipment" means those laboratory procedures, practices, and equipment that are accepted by laboratory health and safety experts as effective, or that the employer can show to be effective, in minimizing the potential for employee exposure to hazardous chemicals.
(o) "Reproductive toxins" means chemicals that affect the reproductive capabilities, including chromosomal damage (mutations) and effects on fetuses (teratogenesis).
(p) "Select carcinogen" means any substance that meets 1 or more of the criteria set forth in the definition of select carcinogen in paragraph (b) of OSHA standard 29 C.F.R. §1910.1450, which is adopted herein by reference. The cited provision of 29 C.F.R. §1910.1450 is available from the Michigan Department of Consumer and Industry Services, Standards Division, P.O. Box 30643, Lansing, Michigan 48909, at no cost, or from the U.S. Department of Labor, OSHA, 801 S. Waverly, Suite 306, Lansing, Michigan 48917, at no cost. The cited definition is printed as appendix C to these rules.
History: 1992 MR 1, Eff. Jan. 25, 1992; 2003 MR 15, Eff. Aug. 5, 2003.

R 325.70104 Permissible exposure limits
Rule 4. For laboratory uses of MIOSHA-regulated substances, an employer shall assure that laboratory employees' exposures to such substances do not exceed the permissible exposure limits specified in MIOSHA occupational health standards.
History: 1992 MR 1, Eff. Jan. 25, 1992; 2003 MR 15, Eff. Aug. 5, 2003.

R 325.70105 Exposure monitoring
Rule 5. (1) An employer shall measure an employee's exposure to any substance that is regulated by a standard that requires monitoring if there is reason to believe that exposure levels for that substance routinely exceed the action level or, in the absence of an action level, the permissible exposure limits (PEL).
(2) If the initial monitoring prescribed by subrule (1) of this rule discloses employee exposure over the action level or, in the absence of an action level, the PEL, an employer shall comply with the exposure monitoring provisions of the relevant standard.
(3) Monitoring may be terminated in accordance with the relevant standard.
(4) An employer shall, within 15 working days after the receipt of any monitoring results, notify an employee of these results, in writing, either individually or by posting the results in an appropriate location that is accessible to employees.
History: 1992 MR 1, Eff. Jan. 25, 1992; 2003 MR 15, Eff. Aug. 5, 2003.

R 325.70106 Chemical hygiene plan
Rule 6. (1) Where hazardous chemicals as defined by these rules are used in the workplace, an employer shall develop and carry out the provisions of a written chemical hygiene plan that provides for both of the following:
(a) Protecting employees from health hazards that are associated with hazardous chemicals in that laboratory.
(b) Keeping exposures below the limits specified in R 325.70104.
(2) The chemical hygiene plan shall be readily available to employees, employee representatives, and, upon request, to the director.
(3) The chemical hygiene plan shall include each of the following elements and shall indicate specific measures that the employer will take to ensure laboratory employee protection:
(a) Standard operating procedures relevant to safety and health considerations to be followed when laboratory work involves the use of hazardous chemicals.
(b) Criteria that the employer will use to determine and implement control measures to reduce employee exposure to

hazardous chemicals, including engineering controls, the use of personal protective equipment, and hygiene practices. Particular attention shall be given to the selection of control measures for chemicals that are known to be particularly hazardous.
(c) A requirement that laboratory-type hoods and other protective equipment are functioning properly and the specific measures that shall be taken to ensure the proper and adequate performance of such equipment.
(d) Provisions for employee information and training as prescribed in R 325.70107.
(e) The circumstances under which a particular laboratory operation, procedure, or activity shall require prior approval from the employer or the employer's designee before implementation.
(f) Provisions for medical consultation and medical examinations in accordance with R 325.70108.
(g) Designation of personnel who are responsible for implementing the chemical hygiene plan, including the assignment of a chemical hygiene officer and, if appropriate, establishment of a chemical hygiene committee.
(h) Provisions for additional employee protection for work with particularly hazardous substances, such as select carcinogens, reproductive toxins, and substances that have a high degree of acute or chronic toxicity. Specific consideration shall be given to the following provisions, which shall be included where appropriate:
(i) The establishment of a designated area or areas that indicate the physical limits of exposure to particularly hazardous substances.
(ii) The use of containment devices, such as laboratory-type hoods or glove boxes.
(iii) Procedures for the safe removal of contaminated waste.
(iv) Decontamination procedures.
(4) An employer shall review and evaluate the effectiveness of the chemical hygiene plan at least annually and update it as necessary.
(5) Appendix A to these rules is nonmandatory, but provides guidance to assist employers in the development of a chemical hygiene plan.
History: 1992 MR 1, Eff. Jan. 25, 1992; 2003 MR 15, Eff. Aug. 5, 2003.

R 325.70107 Employee information and training
Rule 7. (1) An employer shall provide employees with information and training to ensure that they are apprised of and understand the hazards of chemicals present in their work areas.
(2) Such information shall be provided at the time of an employee's initial assignment to a work area where hazardous chemicals are present and before assignments that involve new exposure situations. Refresher information and training shall be provided by the employer to ensure that an employee is aware of the risks of exposure to hazardous chemicals.
(3) Employees shall be informed of all of the following:
(a) The contents of these rules and appendices, which shall be made available to employees.
(b) The location and availability of the employer's chemical hygiene plan.
(c) The permissible exposure limits for MIOSHA-regulated substances or the recommended exposure limits for other hazardous chemicals if there are no applicable MIOSHA rules.
(d) Signs and symptoms associated with exposures to hazardous chemicals that are used in the laboratory.
(e) The location and availability of known reference material on the hazards, safe handling, storage, and disposal of hazardous chemicals found in the laboratory, including material safety data sheets (MSDS) received from a chemical supplier.
(4) Employee training shall include all of the following:
(a) Methods and observations that may be used to detect the presence or release of a hazardous chemical, such as monitoring conducted by the employer, continuous monitoring devices, and the visual appearance or odor of hazardous chemicals when being released.
(b) The physical and health hazards of chemicals in the work environment.
(c) The measures employees can take to protect themselves from health hazards, including specific procedures that the employer has implemented to protect employees from exposure to hazardous chemicals, such as appropriate work practices, emergency procedures, and personal protective equipment to be used.
(5) The employee shall be trained about the applicable details of the employer's written chemical hygiene plan.
History: 1992 MR 1, Eff. Jan. 25, 1992; 2003 MR 15, Eff. Aug. 5, 2003.

R 325.70108 Medical surveillance
Rule 8. (1) An employer shall provide all employees who work with hazardous chemicals an opportunity to receive the following medical attention, including any follow-up examinations which the examining physician determines to be necessary:
(a) When an employee develops signs or symptoms that are associated with a hazardous chemical to which the employee

may have been exposed in the laboratory, the employee shall be provided an opportunity to receive an appropriate medical examination.
(b) If exposure monitoring reveals an exposure level that is routinely above the action level or, in the absence of an action level, the PEL for a MIOSHA-regulated substance for which there are exposure monitoring and medical surveillance requirements, medical surveillance shall be established for the affected employee as prescribed by the particular standard.
(c) When an event takes place in the work areas, such as a spill, leak, explosion, or other occurrence that results in the likelihood of a hazardous exposure, the affected employee shall be provided an opportunity for a medical consultation. Such consultation shall be for the purpose of determining the need for a medical examination.
(2) All medical examinations and consultations shall be performed by or under the direct supervision of a licensed physician who is familiar with the general health effects of hazardous chemicals and sources of specific information on such effects and shall be provided without cost to the employee, without loss of pay, and at a reasonable time and place.
(3) An employer shall provide all of the following information to the physician:
(a) The identity of the hazardous chemical or chemicals to which the employee may have been exposed.
(b) A description of the conditions under which the exposure occurred, including quantitative exposure data, if available.
(c) A description of the signs and symptoms of exposure that the employee is experiencing, if any.
(4) For examination or consultation that is required under this rule, an employer shall obtain a written opinion from the examining physician. The opinion shall include all of the following:
(a) Any recommendation for further medical follow-up.
(b) The results of the medical examination and any associated tests.
(c) Any medical condition revealed in the course of the examination which may place the employee at increased risk as a result of exposure to a hazardous chemical that is found in the workplace.
(d) A statement that the employee has been informed by the physician of the results of the consultation or medical examination and any medical condition that may require further examination or treatment.
(5) The written opinion shall not reveal specific findings of diagnoses unrelated to occupational exposure.
History: 1992 MR 1, Eff. Jan. 25, 1992; 2003 MR 15, Eff. Aug. 5, 2003.

R 325.70109 Hazard identification
Rule 9. (1) With respect to labels and material safety data sheets (MSDS) for hazardous chemicals, both of the following provisions apply:
(a) Employers shall ensure that labels on incoming containers of hazardous chemicals are not removed or defaced.
(b) Employers shall maintain any MSDS that are received with incoming shipments of hazardous chemicals and ensure that MSDS are readily accessible to laboratory employees.
(2) All of the following provisions shall apply to chemical substances that are developed in the laboratory:
(a) If the composition of the chemical substance that is produced exclusively for the laboratory's use is known, an employer shall determine if it is a hazardous chemical. If the chemical is determined to be hazardous, the employer shall provide appropriate training as required by R 325.70107.
(b) If the chemical produced is a by-product of unknown composition, an employer shall assume that the substance is hazardous and shall implement the provisions of R 325.70106.
(c) If the chemical substance is produced for another user outside of a laboratory, an employer shall comply with the OSHA hazard communication standard, being 29 C.F.R. §1910.1200, which is referenced in R 325.70101.
History: 1992 MR 1, Eff. Jan. 25, 1992; 2003 MR 15, Eff. Aug. 5, 2003.

R 325.70110 Use of respiratory protection
Rule 10. If, after appropriate application of feasible engineering and work practice controls, the use of respirators is necessary to maintain exposure below permissible exposure limits, the employer shall provide, at no cost to the employee, the proper respiratory protection equipment. Respirators shall be selected and used in accordance with the requirements of respiratory protection, Part 451., R 325.60051 et seq.
History: 1992 MR 1, Eff. Jan. 25, 1992; 2003 MR 15, Eff. Aug. 5, 2003.

R 325.70111 Recordkeeping
Rule 11. (1) An employer shall establish and maintain, for each employee, an accurate record of any measurements taken to monitor employee exposures and any medical consultation and examinations, including tests or written opinions required by these rules.
(2) An employer shall assure that such records are kept, transferred, and made available in accordance with the provisions of employee medical records and trade secrets, Part 470., R 325.3451 et seq., and are protected from unauthorized disclosure.
History: 1992 MR 1, Eff. Jan. 25, 1992; 2003 MR 15, Eff. Aug. 5, 2003.

R 325.70112 Rescinded.
History: 1992 MR 1, Eff. Jan. 25, 1992l rescinded 2003 MR 15, Eff. Aug. 5, 2003.

R 325.70113 Appendices
Rule 13. Appendices A, B, C, and D to these rules are informational only and are not intended to create any additional obligations or requirements not otherwise imposed by these rules or to detract from any established obligations or requirements.
History: 1992 MR 1, Eff. Jan. 25, 1992; 2003 MR 15, Eff. Aug. 5, 2003.

R 325.70114 Availability of rules and appendices; permission to copy
Rule 14. (1) A copy of these rules and appendices are available at no cost from the Michigan Department of Consumer and Industry Services, Standards Division, P.O. Box 30643, Lansing, Michigan 48909.
(2) Permission to copy any of these documents in full is granted by the director.

Appendix A

FORMS LIST

EQP3858—Change of Information Form Aboveground Tanks Only (rev 03/2003)
EQP3899—Aboveground Storage Tank System Inspection Notification Form (rev 03/2003)
EQP3896—Internal Tank Inspection Summary (rev 03/2003)

MICHIGAN DEPARTMENT OF ENVIRONMENTAL QUALITY, WASTE AND HAZARDOUS MATERIALS DIVISION,
PO BOX 30241, LANSING, MI 48909-7241, Phone 517-335-4035, Fax 517-335-2245, E-mail DEQ-STD-TANKS@michigan.gov

CHANGE OF INFORMATION FORM ABOVEGROUND TANKS ONLY

This information is required under 1941 PA 207, as amended. Any owner who knowingly fails to notify or submits false information shall be subject to a misdemeanor and/or civil penalties not to exceed $5,000 per day for each tank for which notification is not given or for which false information is submitted.

OWNER NAME		LOCATION NAME OR SITE IDENTIFIER		FACILITY NUMBER
OWNER ADDRESS		FACILITY STREET ADDRESS (PO BOX NOT ACCEPTABLE)		AREA CODE & TELEPHONE NUMBER
CITY		CITY		ZIP CODE
STATE	ZIP CODE	STATE	ZIP CODE	
AREA CODE & TELEPHONE NUMBER		CONTACT PERSON (AT LOCATION)		

TYPE OF FACILITY	TYPE OF REPORT
☐ Flammable or Combustible Liquids Storage	☐ New Owner
☐ Liquefied Petroleum Gas Storage	☐ Closure of Facility (All Storage)
☐ Compressed Natural Gas	☐ Closure of Tanks
	☐ Tank(s) Returned to Service

TANKS OUT OF USE OR CHANGE IN SERVICE

TANK IDENTIFICATION NUMBER	TANK #	TANK #	TANK #	TANK #	TANK #
CAPACITY OF TANK					
PRODUCT STORED					
DATE TANK WAS:	INSERT DATE IN ALL BOXES THAT APPLY				
A: REMOVED FROM PREMISES					
B: EMPTIED AND CLEANED					
C: PIPE DISCONNECTED					
D: CHANGED TO NONREGULATED SUBSTANCE					
E: RETURNED TO REGULATED STORAGE					

CERTIFICATION
(Read and Sign After Completing ALL Sections)

I CERTIFY UNDER PENALTY OF LAW THAT I HAVE PERSONALLY EXAMINED AND AM FAMILIAR WITH THE INFORMATION SUBMITTED IN THIS AND ALL ATTACHED DOCUMENTS, AND THAT BASED ON MY INQUIRY OF THOSE INDIVIDUALS IMMEDIATELY RESPONSIBLE FOR OBTAINING THE INFORMATION, I BELIEVE THE SUBMITTED INFORMATION IS TRUE, ACCURATE, AND COMPLETE.

Name and Official Title of Owner or Owner's Authorized Representative (Print)	Signature	Date

COMMENTS AND/OR CLARIFICATION TO THE STORAGE TANK UNIT STAFF:

MAIL TO: STORAGE TANK UNIT
WASTE AND HAZARDOUS MATERIALS DIVISION
DEPARTMENT OF ENVIRONMENTAL QUALITY
PO BOX 30241
LANSING MI 48909-7241

MICHIGAN DEPARTMENT OF ENVIRONMENTAL QUALITY – WASTE AND HAZARDOUS MATERIALS DIVISION

ABOVEGROUND STORAGE TANK SYSTEM INSPECTION NOTIFICATION FORM
This information is required under 1941 PA 207, as amended. Any owner who knowingly submits false information shall be subject to misdemeanor and/or civil penalties.

SECTION I: FACILITY INFORMATION

FACILITY NAME			FACILITY ID NUMBER
FACILITY STREET ADDRESS (PO BOX NOT ACCEPTABLE)			CONTACT PERSON
CITY	STATE	ZIP CODE	TELEPHONE NUMBER

SECTION II: INSPECTION COMPANY INFORMATION

NAME OF FIRM PERFORMING INSPECTION		TELEPHONE NUMBER
INSPECTION COMPANY ADDRESS		CONTACT PERSON
CITY	STATE	ZIP CODE

TYPE OF INSPECTION	TYPE OF TANK
☐ API STANDARD 653 INTERNAL INSPECTION	☐ API 650
☐ STI SP001-00 INTERNAL INSPECTION	☐ UL (UNDERWRITERS LABORATORIES LABELED)
☐ AST TANK LINER INSPECTION	☐ ASME (PRESSURE VESSEL)
	☐ OTHER

SECTION III: TANK INSPECTION INFORMATION

TANK IDENTIFICATION NUMBER					
CAPACITY OF TANK					
PRODUCT STORED					
INSPECTION START DATE					
INSPECTION COMPLETION DATE					

CERTIFICATION
(Read and Sign After Completing ALL Sections)

I CERTIFY UNDER PENALTY OF LAW THAT I HAVE PERSONALLY EXAMINED AND AM FAMILIAR WITH THE INFORMATION SUBMITTED IN THIS AND ALL ATTACHED DOCUMENTS, AND THAT BASED ON MY INQUIRY OF THOSE INDIVIDUALS IMMEDIATELY RESPONSIBLE FOR OBTAINING THE INFORMATION, I BELIEVE THE SUBMITTED INFORMATION IS TRUE, ACCURATE, AND COMPLETE.		
Name and Official Title of Owner or Owner's Authorized Representative (Print)	Signature	Date
COMMENTS AND/OR CLARIFICATION FOR THE STORAGE TANK UNIT STAFF:		

MAIL TO: STORAGE TANK UNIT
WASTE AND HAZARDOUS MATERIALS DIVISION

DEPARTMENT OF ENVIRONMENTAL QUALITY
PO BOX 30241
LANSING MI 48909-7241

If you have questions regarding this, please contact the Storage Tank Unit,
Monday through Friday, between 8:00 a.m. and 5:00 p.m.
Phone: 517-335-4035
E-mail: DEQ-STD-TANKS@michigan.gov
Fax: 517-335-2245

Web Site: www.michigan.gov/deq

MICHIGAN DEPARTMENT OF ENVIRONMENTAL QUALITY, WASTE AND HAZARDOUS MATERIALS DIVISION,
PO BOX 30241, LANSING, MI 48909-7241, Phone 517-335-4035, Fax 517-335-2245, E-mail DEQ-STD-TANKS@michigan.gov

INTERNAL TANK INSPECTION SUMMARY

INSTRUCTIONS: This form is to be used for recording the summary information based on an internal tank inspection pursuant to API Standard 653, 3rd edition, and STI SP001-00, 1st edition. This is required under Part 2 of the Storage and Handling of Flammable and Combustible Liquids (FL/CL) Rules. Fill in ALL applicable data. A copy of this completed form shall be submitted to the Waste and Hazardous Materials Division within 60 days of completion of the inspection.

OWNER INFORMATION			PROJECT INFORMATION			INSPECTOR INFORMATION		
Name			Facility Name Facility ID			Inspector Name API Cert. # or STI Cert. #		
Company Name			Site Address			Company Name		
Street Address			CITY	STATE MI	ZIP CODE	Street Address		
CITY	STATE	ZIP CODE	County			CITY	STATE	ZIP CODE
Telephone Number ( )			Tank Number Construction Date			Telephone Number ( )		
Fax Number ( )						Fax Number ( )		

GENERAL INSPECTION INFORMATION:

Inspection Date: _____ Type: ☐ External ☐ Ultrasonic ☐ Internal Purpose: ☐ Scheduled ☐ Unscheduled ☐ Other (specify): _____

Prior Inspection Date: _____ Type: ☐ External ☐ Ultrasonic ☐ Internal

TANK SPECIFICATIONS:

Manufacturer:		Contents:		Specific Gravity:	
Dimensions:		Capacity:		Fill Height:	
Product heated:	☐ Yes ☐ No	Maximum Operating Temperature # (F):			

TANK CONSTRUCTION:

1. ☐ Bare Steel 2. ☐ Cathodically Protected (Check one: A. ☐ Galvanic or B. ☐ Impressed Current) Date Installed: _____
3. ☐ Coated Steel 4. ☐ Double Bottom 5. ☐ Double Wall 6. ☐ Lined 7. ☐ Other (specify):

Bottom: ☐ Welded ☐ Riveted Original Thickness:_____ ☐ Leak Detection Date Installed:

Shell: ☐ Welded ☐ Riveted No. of Courses: _____ Orig. Course Thickness.: 1. _____2. _____3. _____ 4. _____5. _____6. _____7. _____8. _____

Foundation: ☐ Grade ☐ Concrete Pad ☐ Concrete Ringwall ☐ Stone Ringwall ☐ Other

Bottom Release Prevention/Detection: 1. ☐ Impermeable Dike Liner (Description) _____
2. ☐ Cathodic Protection (Date of last survey & results):
_____
3. ☐ Internal Lining (Date installed & type):
_____
4. ☐ Groundwater monitoring 5. ☐ Vapor monitoring 6. ☐ Interstitial monitoring

Roof: 1. ☐ Open 2. ☐ Fixed: ☐ Cone ☐ Dome ☐ Umbrella ☐ Other: _____
3. ☐ Floating: ☐ Internal ☐ External ☐ None

TANK INSPECTION:

Nondestructive Test Method: (Check where test applied)	Bottom		Shell		Roof	
	Weld	Plate	Weld	Plate	Weld	Plate
Visual	☐	☐	☐	☐	☐	☐
Ultrasonic (Spot)	☐	☐	☐	☐	☐	☐
Ultrasonic (Scan)	☐	☐	☐	☐	☐	☐
Liquid Penetrant	☐	☐	☐	☐	☐	☐
Penetrating Oil	☐	☐	☐	☐	☐	☐
Magnetic Particle	☐	☐	☐	☐	☐	☐
Radiography	☐	☐	☐	☐	☐	☐
Mag Flux Scan	☐	☐	☐	☐	☐	☐
Vacuum Box	☐	☐	☐	☐	☐	☐
Tracer Gas	☐	☐	☐	☐	☐	☐
Holiday (Coatings)	☐	☐	☐	☐	☐	☐
Other (Describe)						

Settlement Evaluation: ☐ Yes ☐ No

INSPECTION RESULTS:

	Bottom		Shell		Roof	
	External	Internal	External	Internal	Fixed	Floating
Min. Remaining Thickness						
Min. Required Thickness						
Max. Corrosion Rate						

Release? Bottom: ☐ Yes ☐ No Shell: ☐ Yes ☐ No

Settlement Within Tolerance? Bottom (max.): ☐ Yes ☐ No Differential: ☐ Yes ☐ No Edge: ☐ Yes ☐ No Bulges/Ridges: ☐ Yes ☐ No

Comments: _____

REPAIR SUMMARY: (Include description, date completed, and date of post-repair inspection)

Foundation: _____

Bottom: _____

Shell: _____

Roof: _____

Appurtenances: _____

Hydrostatic test required?: ☐ Yes ☐ No Test date: _____

Results: _____

INSPECTION SCHEDULE: (Supporting calculations shall be available for review upon request)

External (ultrasonic): Corrosion rate known?: ☐ Yes ☐ No

(Year) #1:_____ #2: _____ #3: _____ #4: _____ #5: _____

External (visual): (Year) #1:_____ #2: _____ #3: _____ #4: _____ #5: _____

Internal: (Year) _____

CERTIFICATION		
I CERTIFY UNDER PENALTY OF LAW THAT I HAVE PERSONALLY EXAMINED AND AM FAMILIAR WITH THE INFORMATION SUBMITTED IN THIS FORM AND ALL ATTACHED DOCUMENTS AND THAT I HAVE VERIFIED THAT THE INFORMATION IS TRUE, ACCURATE, AND COMPLETE.		
API 653 INSPECTOR or STI INSPECTOR	SIGNATURE	DATE

If you have questions regarding this form, please contact the Storage Tank Unit, Monday through Friday, between 8:00 a.m. and 5:00 p.m.
Phone: 517-335-4035 Fax: 517-335-2245 E-mail: DEQ-STD-TANKS@michigan.gov Web Site: www.michigan.gov/deq

History: 1992 MR 1, Eff. Jan. 25, 1992; 2003 MR 15, Eff. Aug. 5, 2003.

DEPARTMENT OF CONSUMER AND INDUSTRY SERVICES

DIRECTOR'S OFFICE

OCCUPATIONAL HEALTH STANDARDS

R 325.70251
Source: 2001 AACS.

HAZARD COMMUNICATION

R 325.77001
Source: 1995 AACS.

R 325.77002
Source: 1995 AACS.

R 325.77003
Source: 1995 AACS.

BENZENE

R 325.77101
Source: 2002 AACS.

R 325.77102
Source: 2001 AACS.

R 325.77103
Source: 1989 AACS.

R 325.77104
Source: 1989 AACS.

R 325.77105
Source: 2001 AACS.

R 325.77106
Source: 1989 AACS.

R 325.77107
Source: 2001 AACS.

R 325.77108
Source: 2001 AACS.

R 325.77109
Source: 2001 AACS.

R 325.77110
Source: 2001 AACS.

R 325.77111
Source: 2001 AACS.

R 325.77113

Source: 2001 AACS.

R 325.77114
Source: 2001 AACS.

R 325.77115
Source: 2001 AACS.